Ref 7/F

Unasylva

AN INTERNATIONAL REVIEW OF FORESTRY AND FOREST PRODUCTS

VOLUME 14, NUMBER 1, 1960

7 JUN 1960

Unasylva

1960 - Volume 14 Number 1

Plans for the Fifth World Forestry Congress 3
I. T. Haig

Radiata Pine as an Exotic 6
C. W. Scott

Methods and Machines in North American Nurseries 17
Roland Rotty

The Work of FAO

Tenth Session of FAO Conference 39

Staff Appointment 44

Obituary Notice: Aldo Pavari 45

Equipment Section 46

Annual subscription: U.S. $2.50 or 12s. 6d.
Single copy: U.S. $0.65 or 3s. 3s.

Rates can be paid in local currencies when orders are placed through the authorized sales agents listed on the back cover.

FAO — The Food and Agriculture Organization of the United Nations — grew out of a United Nations Conference held at Hot Springs, Virginia, U.S.A., in May 1943. The nations agreed to work together to secure a lasting peace through freedom from want. The Organization was formally founded at Quebec, Canada, in October 1945. It was located at Washington D.C. until 1951 when the Headquarters office was moved to Rome.

Unasylva is prepared by the Forestry and Forest Products Division, directed by Mr. Egon Glesinger, and published every quarter in English, French and Spanish. It attempts to cover a range of interest as wide as that of the Forestry Division whose work it mirrors. Signed articles express the opinions of the authors and do not necessarily represent the views of the Organization. All material in ***Unasylva*** may be freely reprinted, but acknowledgment is requested, together with a copy of the publication containing the reprint.

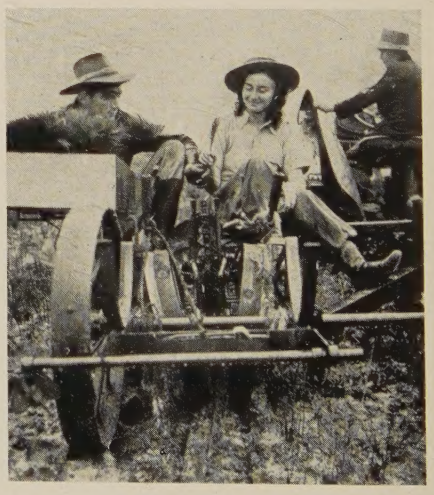

Cover photograph. *In New South Wales, Australia, girls are often employed as "foresters" during the three to five months tree planting season. Here a tree-planting machine is being used to set out 1,500 acres of* Pinus caribaea. *This introduced pine grows rapidly on the moist, low-lying Australian coastal areas. Trees reach maturity at 15 years, are big yielders of turpentine, and furnish excellent timber for building and joinery.*

Australian official photograph.

Unasylva

An International Review of Forestry and Forest Products

FAO CONFERENCE

EVERY two years the full Conference of FAO meets to examine the entire field of the Organization's work and to lay down policy directives for the future.

The Tenth Session was held at Rome Headquarters in November 1959 and delegates of the 76 member countries of FAO proceeded to elect Cyprus and eight African countries to Associate Membership in the Organization (Republic of Chad, Gabon Republic, Madagascar, Nigeria, Federation of Rhodesia and Nyasaland, Republic of Senegal, Sudanese Republic and Somalia) and one African country, Guinea, to full membership. Somalia, Nigeria and Cyprus, as well as the Cameroons and the Republic of Togo, were asked to apply for full membership as they acceded to independence.

This accent on the emergence of the new Africa was marked also by the election of the Liberian delegate, Richelieu Morris, as Chairman of the Conference - and probably one of the best Chairmen there has been. Elected as first Vice-Chairman was Soesilo H. Prakoso, Director-General of the Directorate for Forestry and Land-Use Planning in Indonesia and a former chairman of FAO's Asia-Pacific Forestry Commission.

The tone for the Conference was set by Professor Arnold Toynbee, the famous British historian, who delivered the first McDougall Memorial Lecture in honor of the Australian who was one of the leading figures in the creation of FAO. Speaking on population and food supply, Professor Toynbee noted that the year 1945 saw both the establishment of FAO and the harnessing of atomic energy as a weapon of warfare. These two historic events were at opposite poles of the gamut of human achievement. Yet there was an historical connection between them. "By 1945, man was within sight of acquiring the power either to provide a humane standard of living — spiritual as well as material — for the whole human race or alternatively to commit genocide, a new word that we have had to coin to describe an atrocity that was previously beyond our reach."

Attending the Conference were 37 foresters from 32 countries and for the first time those from the underdeveloped parts of the world outnumbered those from the more advanced regions. In all, 53 delegates participated in the meetings of the Forestry Committee which was presided over by J. Jungo, Inspector-General of Forests, Switzerland, and the report of this Committee, with some amendments, was subsequently endorsed by the full Conference.

Substantive results were approval and endorsement of FAO's Mediterranean Development Project, of which the Project Leader had been Egon Glesinger, Director of the Forestry and Forest Products Division; creation of an African Forestry Commission and of a North-American Forestry Commission, thus completing the pattern of these regional bodies to cover all member countries of FAO; a decision to include wildlife management within the sphere of responsibility of the Forestry and Forest Products Division; and clear indications of the expansions which it is desirable to work into FAO's program for the next budget period, 1962-63.

The Conference unanimously re-elected Mr. B.R. Sen as Director-General of the Organization for another four years. Replying to this signal mark of confidence, Mr. Sen said, "If the Organization is better fitted today to accept the challenge of its objectives and fulfill more efficiently its responsibilities, it is largely due to the support you have given me as well as to the dedication and loyalty of my colleagues."

To foresters everywhere:

I take this opportunity to send you a personal invitation and warm welcome to the Fifth World Forestry Congress. American foresters look forward with pleasure to renewing old friendships and to making new ones at this meeting of the world's foresters. Come, join us at Seattle, 29 August to 10 September 1960.

Sincerely,

Richard E. McArdle
Chief, United States Forest Service
and Chairman, Organizing Committee
Fifth World Forestry Congress

Figure 1. – *The Organizing Committee, composed of men and women representing every phase of American forestry, first met in Washington, D.C., on 12 and 13 January 1959, to lay plans for the Congress. It met again on 14 November 1959, in Seattle, Washington, to review progress and make further plans.*

FIGURE 2. – *Aerial view of the University of Washington campus with Lake Washington in background, left and Lake Union in background, right.*

Plans for the Fifth World Forestry Congress

I. T. HAIG
Executive Secretary, Organizing Committee

THE Fifth World Forestry Congress, for which preparations are now well in hand, will take place in one of the world's most productive forest regions, the home of the world-famous Douglas fir. Foresters from all parts of the world will meet for 12 days at the University of Washington, whose beautiful campus looks towards the lakes and Mount Rainier, one of the towering snow-covered volcanic mountains that mark the main coastal range of Western North America.

The campus itself was made available to the Congress through the courtesy of the University Board of Regents and former University President, Dr. Henry Schmitz, himself a professional forester. It contains a number of spacious buildings, among them Anderson Hall, which houses the College of Forestry, the modern Student Union building which will be one of the Congress meeting halls, and comfortable modern dormitories which will be made available to congress participants.

Responsibility for preparations for the Congress, in collaboration with the Forestry and Forest Products Division of the Food and Agriculture Organization, have been vested by the Department of State in an Organizing Committee of 45 men and women from every phase of forestry activity and interest in the United

FIGURE 3. – *Heavily timbered islands on the coastal Tongass National Forest(State of Alaska). This is a virgin stand of Sitka spruce* (Picea sitchensis) *and Western hemlock* (Tsuga heterophylla).

States – the national departments (Agriculture, Interior and Commerce), forestry schools, forestry associations and societies, conservationists, state forest services, and forest industrialists. The Chief of the United States Forest Service, Dr. Richard E. McArdle, is Chairman of the Organizing Committee.

Detailed preparations have been delegated to seven working groups on finance, program, tours, machinery and equipment exhibits, educational exhibits, and local arrangements, under the continuing direction of a Central Executive Committee, with Dr. V. L. Harper of the United States Forest Service as Chairman. Some committees are quite large. There are 79 persons on the Program Committee and over 60 persons on the Tours Committee, for example, with the result that over 270 American foresters, industrialists, and associated forestry representatives are now engaged in one capacity or another in preparing the Fifth World Forestry Congress.

These committees have already made preliminary plans for the technical program, for pre-Congress, post-Congress, and in-Congress tours or excursions; for interesting commercial (machinery and equipment) and educational exhibits (films, posters, forestry displays) and other activities.

The Congress program will cover: silviculture and management; genetics and tree improvement; forest protection; forest economics and policy; education; forest products; forest and range watersheds; forest recreation and wildlife; logging and forest operations; tropical forestry.

It is hoped to have world authorities speaking on carefully selected forestry topics of current world interest under each of these titles and leading the discussions. As in former congresses, papers may be presented on any congress topic by any congress participant. The official languages will be English, French and Spanish.

The Organizing Committee plans to take the occasion of the Congress to show foreign participants as much as possible of the United States, its people and its forests, forest institutions, and forest industries. The northern

neighbor, Canada, is planning to do the same; after the Congress, Mexico will be host to a study tour on Mexican pines which is being organized in conjunction with FAO. The West Coast location of the Congress, with its relative nearness to the world-famous redwoods and Douglas firs and the equipment and giant machinery necessary to log and mill the great trees of these forests, will make it relatively easy for congress members to see these sights. The magnificent scenery of some of the western national parks, such as Yosemite with its great granite knobs and spectacular waterfalls is expected to attract many congress members.

Congress excursions are also planned to other interesting and important forest regions. These include Alaska with its fjords, glaciers and virgin spruce-fir forests, and its fledgling forest industries; the semiarid and arid southwest, famous for ponderosa pine; the Rocky Mountain states and Lake states with their varied scenery and forest conditions; the New England states with their great universities and many and varied forest industries; and the extensive southern pineries (over 100 million acres in extent) stretching along the southeastern seaboard from the New Jersey State coast, just south of New York State, to New Orleans, Louisiana, and beyond on the Gulf of Mexico.

As Dr. Richard E. McArdle, Chairman of the Organizing Committee, indicates in the personal invitation printed in this issue, the United States Organizing Committee welcomes the opportunity to meet with the foresters of other nations, to discuss with them the forestry questions of greatest current interest and importance, and to show them at least a little of the forest and forestry activities of its country.

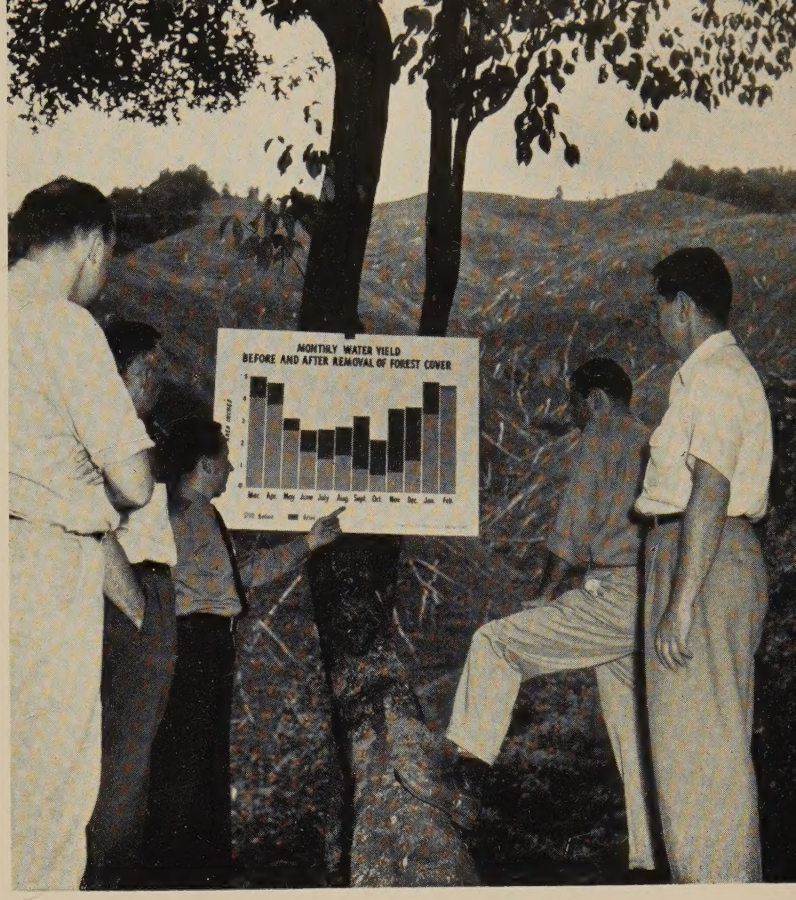

FIGURE 4. – *Forester at the Coweeta Hydrological Laboratory shows a watershed purposely clear-cut to determine the influence of forest cover on waterflow. Laboratory is operated by the United States Forest Service (State of North Carolina, Southern United States).*

FIGURE 5. – *Institute of Forest Genetics. Here is America's oldest research establishment devoted to producing better forest trees through genetics (State of California, Pacific Coast of United States).*

Radiata Pine as an Exotic

C. W. Scott
FAO Technical Assistance Officer

This article is a condensation of a chapter from a forthcoming FAO publication on Pinus radiata, *commissioned by the Forestry and Forest Products Division. It summarizes the experience in the five countries where this species has been most extensively planted — New Zealand, Chile, Australia, Spain and the Union of South Africa. The full publication will cover the botany, ecology and growth in the native habitat; the tree as an exotic; planting, thinning and pruning techniques; natural regeneration, growth and yield; pathology and protection; harvesting methods; wood technology and utilization; and marketing and trade.*

In four countries south of the equator, New Zealand, Chile, Australia and South Africa, and in one country north of the equator, Spain, *Pinus radiata* has been widely used as a successful exotic since about 1923, often after much earlier planting on a small scale had shown how hardy the pine was, how fast it grew and what useful general purpose wood it produced, in the right climate on a suitable site. The total area planted with this pine in the five countries named, up to approximately 1956-57, is some 1.55 million acres (0.63 million hectares). Table 1 shows the area large planted in each country separately for state, large companies and local bodies or private persons, where such separate data are available.

The results in each of these five countries offer valuable guidance on what to do and what not to do with this pine or any similar exotic. The information available from the five major growers is relatively extensive.

A. D. Lindsay (1937), G. B. Rawlings (1957) and climatic studies in New South Wales (Australia) (1957), make it clear that *P. radiata* thrives in a Mediterranean type of climate, with winter rain and summer drought and with 15 inches (380 millimeters) or more of annual rainfall, supplemented in the summer by fog, mist or other such moisture. The mean maximum temperature of the summer months should not exceed 70° F; (21° C.); midwinter frost is tolerated but frost in the growing season damages or kills the tree, according to its severity; and hail may be a limiting factor by encouraging the entry of the fungus, *Diplodia*, It should be remembered that, in its native California, the species grows always within some 6 miles (10 kilometers) of the sea and from sea level to only some 1,000 feet (300 meters) above that level. In New Zealand and Australia, it is successfully grown, sometimes, much further from the sea and to 2,000-4,000 feet (600-1,200 meters) above sea level.

Monterey, the home of *P. radiata* in California, is close to latitude 37°N., and Concepción, Chile, where the same species thrives very strikingly as an exotic, is close to latitude 37° S. The two greatest concentrations of exotic *P. radiata* at Rotarua, New Zealand and at Mount Burr, South Australia are both in about 38° S. latitude. In other parts of Australia, the very considerable and successful stands of the same pine in the states of Victoria and New South Wales are in latitude 34° to 37° S. but successful stands are found in New Zealand as far as 46° S., and near the north coast of Spain as far as 43° N. Moreover, recent work on natural and artificial interbreeding of *P. radiata* with its near relatives, *P. attenuata* and *P. muricata*, and on the two-needled *P. radiata* var. *binata* which occurs on the Mexican island of Guadalupe 500 miles (830 kilometers) south of the mainland range of the tree, in latitude 29° N., suggests that it may be possible in future to extend still further the permissible range of *P. radiata* as a successful exotic.

Comprehensive systems of classifying the climates of the whole world, such as that of Köppen or Thorn-

Table 1. – Areas of *Pinus radiata* Planted by the Five Countries with Major Stands of this Pine, 1956

Country	State	Large companies	Local bodies and small private owners	Total of *P. radiata*	*P. radiata* as a % of all exotic conifers
	in thousand acres (hectares)				*percent*
New Zealand	202.0 (80.8)	285.0 (114.0)	85.0 (34.0)	572.0 (228.8)	60
Chile	—	—	—	494.0 (200.0)	99
Australia	217.0 (86.8)	—	89.0 (35.6)	306.0 (122.4)	76
Spain	49.0 (20.0)	—	77.0 (31.0)	126.0 (51.0)	100
South Africa	30.0 (12.0)	—	23.0 (9.2)*	53.0 (21.2)*	8
Total	—	—	—	1,551.0 (623.4)	58

*) Approximate figures.

thwaite, appear to be unsuitable as yet as a safe guide to the regions where *P. radiata* will thrive, other factors being favorable. From Australia comes a warning that within an area mapped as having a single class of Thornthwaite's climates there can be some districts where *P. radiata* will thrive and others where it will not thrive at all. Foresters are advised to study the climatic and other data of the proposed site and, if the prospects are reasonably favorable, to try out the tree on a small or moderate scale. The seed is cheap and plentiful, and results are soon evident. In particular, experience with the species in New South Wales (Australia) is valuable because the failures as well as the marked successes have been recorded candidly.

P. radiata likes 3 to 4 feet (1 to 1.2 meters) of well-drained soil and in its natural habitat is less exacting as to soil quality than *Pseudotsuga menziesii* or *Pinus ponderosa*. In Australia, however it is more exacting than *Pinus pinaster* (*maritima*). In soil moisture demands, the native *P. radiata* needs less moisture than *Pseudotsuga menziesii* but more than *Pinus ponderosa*.

On the much debated question of the risks involved in large areas of pure plantations, reference is invited to the balanced discussion of this general problem in the FAO publications, *Forest Plantation Protection against Diseases and Insect Pests* and *Choice of Tree Species* (Development Papers Nos. 3 and 13).

Other useful discussions of the problem, in particular that of pure *P. radiata*, are those of J. J. de Gryse (1955) and G. B. Rawlings (1957). All those who are familiar with the facts are agreed on the urgent need for keeping the pine to climates and sites at least reasonably favorable, and for assuring as much tending, especially suitable thinning, as is economically possible. Prudence suggests also that it is well to spread the risks, from epidemics or unforeseen changes in the type of wood wanted by consumers, by planting suitable quotas of profitable species other than *P. radiata*. The plans of many states and private foresters to plant great areas mainly or only with *P. radiata* are proof that the tree is exceptionally easy and cheap to establish and exceptionally productive. They are also a sign that it is not at all easy to find other species comparable with *P. radiata* in cheapness and profit. Research must continue to seek ways of reducing the risks of tree monoculture, to make it easier to vary the species or races planted, and to maintain healthy forest soils and successive crops in perpetuity.

Those who advocate uneven-aged forests of intimately mixed species must take account of the strong preference of manufacturers for considerable coupes of one species and age to simplify and concentrate extraction work and give as much uniformity as possible to the batches of material arriving at any one time at the pulp mill or sawmill. It may be necessary to compromise between the planting of different species according to the varying sites available and the economic advantages of uniformity to the manufacturer so as to secure the optimum, avoiding both unhealthy or inadequate crops and undue processing costs. For conifers such as *P. radiata* the best answer may be pure even-aged blocks of each species, of suitable area, with adequate variation of the species or race, by blocks, and a succession of age classes to secure continuity. From New Zealand has come the very interesting suggestion that it might be well to grow an even-aged crop of *P. radiata* pulpwood on a 20-year rotation below an even-aged crop of saw timber trees on a 40-year rotation as a two storied forest.

Each of the five countries with large areas of exotic *P. radiata* is dealt with in the order of total area of the pine. Much of the information on the three countries of the British Commonwealth (New Zealand, Australia and South Africa) comes by permission from reports prepared by them for the Seventh Commonwealth Forestry Conference of 1957, held in Australia and New Zealand. The information on all exotics from these countries is being incorporated at Oxford in a forthcoming revised edition of R. S. Troup's *Exotic Forest Trees in the British Commonwealth* (1932).

New Zealand

The scale and speed of exotic planting have been so great in New Zealand that there have been acknowledged mistakes, but it is interesting to find how much success has been achieved.

An arduous National Forest Survey (1946-1955) of all the indigenous forests of the country has recently been completed, in spite of the demands and problems of almost 1 million acres (400,000 hectares) of exotic conifers. It is estimated that indigenous forests once covered some 70 percent of the country and reached perhaps 45 million acres (18 million hectares), compared with the 15 million acres (6 million hectares) left in 1957 after the usual clearing for agriculture, pasture and lumber. Some of the low ground clearing was necessary; some of the high ground clearing has led to erosion; and the waste in burning high grade stands of virgin timber was great. The forests were of the mixed temperate evergreen type, with *Podocarpaceae* and *Agathis* as prominent elements, and of the southern hemisphere beech (*Nothofagus*) type, with considerable resemblance to the native forests of Chile.

By 1890 it was clear that the Podocarps were dwindling fast as a main source of timber for building and other purposes, and that their slow growth and lack of regeneration did not make for easy forest conservation and management for a sustained timber yield. Also by then it had been proved that exotic conifers from North America, such as *Pinus radiata* and *Pseudotsuga menziesii*, specially the former, throve exceptionally well in New Zealand and grew very fast. As a result, systematic planting by the State began about 1890 and continued on a small or moderate scale until 1923, when it suddenly increased very rapidly. Between 1923 and 1936 an exotic stand of some 600,000 acres (240,000 hectares) was planted within about 12 years, at an average rate of 50,000 acres (20,000 hectares)

per year, roughly half by the State and half by private interests. *P. radiata* formed about 40 percent of the state plantation and 85 to 90 percent of the private woods. Together with the planting before 1923 and since 1936, the grand total of exotic conifers in 1957 was some 950,000 acres (380,000 hectares).

The exotic planting boom of 1923-36 led to serious mistakes and financial losses. Private investors suffered, in particular; so much so that an official enquiry was held in 1934 which led to improvement in the constitution of afforestation organizations. It is wrong to attribute those losses to faults in the chief species concerned, *P. radiata*. The losses were due to mishandling. Subsequent successes have proved what an excellent tree is this pine when well handled, and how productive it is of good lumber and pulp if so handled. The New Zealand Forest Service considers among the major mistakes that were made in planting exotics were unsuitable sites, inferior seed and planting techniques, lack of tending (weeding, thinning), too wide spacing, inadequate fire protection, a bad age-class distribution, and, in some cases, poor location in relation to markets. This is a formidable list on which it is easy to be wise after the results are apparent. The important point is to learn from the record for current planting programs and for the future, and to recognize how much, nevertheless, has been achieved with *Pinus radiata*.

This Californian exotic, of no economic account in its natural range, has in fact filled a great gap in New Zealand's timber requirements. It has provided the basis for a large lumber and pulp industry, and substantial exports. Up to 1930, 90 percent of New Zealand's timber needs were met from her native forests, which were disappearing under the load. By 1956, nearly half the total annual cut of trees was being met from the exotic plantations, and *P. radiata* formed 95 percent of the exotics cut. Nearly half the building timber used in the country is now from home-grown exotics and all the pulp and paper produced is from *P. radiata*. In recent years, some 35 million board feet (82,600 cubic meters) of lumber from the exotics have been exported annually. Finally it should be remembered that, in 1957, little of the exotic stand was as yet over 40 years old. The New Zealand Forest Service feels that there is no reason now to malign the product of the untended and frequently ill-sited forests established 25 to 30 years ago. It is better than anyone had any right to expect, and from the range of exotic conifers established in New Zealand one would have difficulty in naming a timber superior to *P. radiata* for both general and special utility.

Climate

The climate of most of New Zealand is of maritime type with an annual rainfall usually between 25 and 80 inches (625 and 2,000 millimeters), except for certain mountainous zones which are much wetter and two drier areas of the South Island (central Otago and the Canterbury plains). The rain tends to be evenly distributed throughout the year, but in the North Island there is a slightly lower fall in summer, a feature which when pronounced appears to be important for the health of *P. radiata* in other countries. Atmospheric humidity is usually high in the central area of the North Island, where much *P. radiata* has been planted (Rotorua-Kaingaroa), and the climate of that area is described as superhumid. Temperatures are favorable to tree growth for much of the year, especially in the North Island, so that exotic forest trees may have a very long growing season. Unseasonable frosts do occur, however, which cause some damage to exotics and restrict their safe range to some extent. On the whole, the climate of those parts of New Zealand where there is most *P. radiata* is extremely favorable for rapid growth, though it is not of the Mediterranean type in which the pine thrives in its native home and in the Concepción zone of Chile.

G. B. Rawlings (1957) has warned of the dangers to the tree if summers are too warm and wet. He regards the climate of New Zealand north of latitude 39° S., including the great Kaingaroa and other plantings of *P. radiata*, amounting to some 400,000 acres (160,000 hectares) or more, as approaching the humid-temperate type, rather than the west-maritime type south of 39° S. Others may not agree with his climate classification, but there is no doubt of the danger to *P. radiata* if there is too much damp heat in summer.

Soils and land available for planting

The greatest area of *P. radiata* is on the podzolized pumice soils formed in the center of the North Island from rhyolitic ash showers. They are sandy but hold moisture fairly well. Such soils occupied much of the Kaingaroa plains and were easy to plant. They were largely devoid of big trees and carried only tussock grass (*Poa caespitosa*) or bracken (*Pteridium esculentum*), a thin growth of manuka (*Leptospermum scoparium*) or low growth of monoao (*Dracophyllum subulatum*). Some 600,000 acres (240,000 hectares) of exotic conifers have been planted in this area, of which about two thirds are *P. radiata*. At the time of the great tree planting boom, in 1923-1936, these pumice soils were believed to be unfit for agriculture or grazing; but since then it has been discovered that if their lack of a trace element, cobalt, is corrected, most of them are excellent for farming.

In the extreme north of North Island the soils are less favorable, including heavy podzolized soils of low fertility, in some cases developed under burnt kauri (*Agathis*) forest. In the South Island the soils east of the main mountain chain include loess mixed with shingle and clay on the low ground and unstable mountain soils on the higher ground. The latter pose urgent problems of conservation and the prevention of erosion in which exotic trees may help.

Area planted and future planting

New Zealand has the largest total area of *P. radiata* in the world. 572,000 acres (231,000 hectares). This *P. radiata* is approximately two thirds of the total

stand of exotic conifers of all kinds. The privately-owned plantations consist of *P. radiata* to the extent of 85 percent or more, but in the state plantations the proportion is only some 40 percent, giving a better spread of risk and a better insurance against epidemic. Of the state plantations of *P. radiata* some 65 percent are in the 1921-1930 age class. A very large proportion of the company-owned *P. radiata* was planted in 1923-36. The present state planting program is for some 3,000 to 4,000 acres (1,200 to 1,600 hectares) per year of *P. radiata* but plans are being drawn up for a much larger program in which radiata will be included at least in proportion to its share of percent planting (40 to 50 percent).

Sites used

The pine has been found to tolerate a wide range of soils from sands to clays, including coastal sand dunes. It seems to grow best on deep, freely drained, sandy loams of moderate fertility, capable of supporting moderate to vigorous bracken fern (*Pteridium*). It does not thrive on wet sites or low fertility podzolized clays, where it is prone to die-back, poor crowns and needle fusion. It is drought resistant but young trees are sensitive to frost. On shallow soils, especially with a layer of pan or consolidation, it is subject to wind throw.

Recent work suggests that the order of nutrient requirements in soils for exotic pines in New Zealand is as follows:

Least exacting	– *P. pinaster* (*maritima*)
Rather more exacting	– *P. elliottii* and *P. taeda*
More exacting	– *P. radiata* and *P. patula*

Results and potentialities

The broad results from *P. radiata* in New Zealand indicate that, in spite of mistakes and in some cases mishandling, this exotic has succeeded recently in meeting about half the total annual cut of home grown timber, or in other words reducing by half the consumption for lumber of the disappearing native trees, such as Podocarps. It has also provided the sole raw material for an already large pulp and paper production for home needs and export, with good prospects, and an appreciable quota of sawn lumber for export. The successes achieved are the more remarkable because the *P. radiata* crops concerned are only 40 years old or less. The annual yield of *P. radiata* is put at 53 million cubic feet (1.5 million cubic meters) of sawlogs, 0.34 million cubic feet (9,629 cubic meters) of peeler logs for veneers, and 25 million cubic feet (708,000 cubic meters) of pulpwood; and the annual sawmill output of *radiata* lumber at 290 million board feet (684,400 cubic meters).

The yield on an average site in New Zealand is estimated at 5,240 cubic feet (148 cubic meters) at 20 years, 9,850 cubic feet (279 cubic meters) at 30 years, and 12,260 cubic feet (347 cubic meters) at 40 years, in all cases measured inside the bark to a minimum 6 inches (15 centimeters) top diameter.

The potentialities of *P. radiata* in New Zealand are very great, especially as chief substitute for the stands of native trees which are vanishing under heavy consumption. The native species apparently cannot supply the lumber needed for the home demand on a sustained basis at an economic cost, however useful and important they may well be as protection forests against erosion and for water conservation. Further, this chief exotic pine *P. radiata* is a first class producer of pulp and paper for home use and export; and with proper handling it is a potential source of excellent cheap export lumber, when thinning, pruning, and certainly the use of stock of superior parentage, with lighter branches and fewer large knots, have raised the average grade of the lumber produced. At present there is too much rough lumber of the box-making grades and not enough fit for export as house building lumber.

The whole future of *P. radiata* and all other exotics depends on so handling them that they remain healthy and free from disastrous epidemics or soil deterioration. The progress in this respect in agriculture encourages the hope of similar success in forestry.

Chile

The history of exotics in Chile, specially that of *P. radiata* (in that country always called *pino insigne*), has much in common with the history of exotics in New Zealand. One difference is that the half million acres (200,000 hectares) of *pino insigne* in Chile were, in 1958, roughly 15 to 20 years younger, on the average, than the 600,000 acres (240,000 hectares) of the same species in New Zealand. Another difference is that the Concepción zone of Chile, where most of the *P. radiata* has been planted, has a truly Mediterranean type of climate, with a dry summer. The Chilean stands are, therefore, specially healthy and vigorous, even more so than in New Zealand. However, Chile has great need of vigilance against epidemics because *P. radiata* forms practically 100 percent of her main stands of exotic conifers, and 92 percent of all her plantations in the main *pino insigne* zone.

The native forests of Chile are dominated by the southern beeches (*Nothofagus*) and *Laurelia serrata* (tepa), with some indigenous conifers related to those of New Zealand, such as *Araucaria* and sundry Podocarps. These forests are disappearing rapidly, especially in the more accessible areas, under fire and axe, not only from land suited to permanent agriculture and grazing but also, unfortunately, from much land which would be best used for permanent forest. In this situation, as in New Zealand, the exotics, specially *pino insigne*, have come to the rescue, with great effect in the supply of urgently needed cheap lumber and pulpwood for home needs and for export. The exotics, however, are not planted in the higher mountains where conservation of the native forests to avoid erosion and floods is urgent.

Pino insigne was introduced to Chile in 1885 by Sr. Arturo Junge. Large-scale planting began in a number of places about 1935, averaging perhaps 20,000 to 25,000 acres (8,000 to 10,000 hectares) per year, and increased to a peak of 40,000 acres (16,000 hectares) a year in 1947-49. The figures are only approximate because much of the planting has been by small private landowners and others for whom accurate details are not recorded. Over 80 percent of all the *P. radiata* in Chile is concentrated in the central part, in 7 of her 25 provinces, called the Concepción zone. Fortunately, it has the best climate, perhaps close to the optimum available in the world, for this pine. Of the pine, 85 percent is privately owned, and only 15 percent is owned by the State or semi-state agencies. About 70 percent of the pine was under 15 years old in 1958, compared with New Zealand's 65 percent of 30 years old or less in the same year.

The State has encouraged tree planting by exempting plantations from taxation for their first 30 years, by distributing plants, and by other measures. However, the prime motives in the pine planting have been the enterprise of private persons and companies, aiming at profitable supplies of trees for pulp and lumber. It is to be hoped that these legitimate aims will not be frustrated by lack of capital and skill for building and operating the necessary pulp, paper and saw mills, or by lack of the essential road, rail and harbor facilites, and marketing organization, to handle the fast mounting production of the plantations.

The magnitude of the production already achieved shows how much native forest the exotic pine is already saving, although most of that pine is only 15 years old or less. The current production of *pino insigne* lumber is estimated at about 50 to 60 million board feet (120,000 to 140,000 cubic meters), of which some 10 to 30 percent has been or is being exported, depending on the foreign demand. Two pulp or paper mills, using at least a proportion of *pino insigne*, have been in operation for some years, two new ones have been built, and four more are projected. By 1960-61 there may be an export of 100,000 tons of pulp, wholly from *pino insigne*.

Finally, it is to be noted that much of the pine is on poor land, unsuitable for permanent agriculture and subject to erosion if not protected by forest or other cover. Possibly modern methods may make some of this type of land suitable for carefully controlled pasture; but in the 3.75 million acres (1.5 million hectares) in the Concepción zone which are estimated to be unsuitable for agriculture and suitable for pine there appears to be ample room for both pasture developments and pine planting, to the full extent justified by home and export markets.

Climate

As already said, the important zone for *pino insigne* is that of the seven provinces around Concepción, from 35° 15′ S. to 38° 30′ S. where over 80 percent of the pine grows. This zone has a typical Mediterranean climate, like that of the home of *P. radiata* in California, with relatively dry summers and rain mainly in the winter. It is highly favorable for the health and rapid growth of the pine. The annual rainfall in the plantation areas ranges from about 40 to 52 inches (1,000 to 1,300 millimeters) in much of the zone, with some parts receiving only 28 inches (700 millimeters) and others possibly up to 64 inches (1,600 millimeters) where rather higher ground has been planted. Neither winds nor frost are troublesome, and there is no serious snow or hail damage.

G. B. Rawlings (1957), on his visit to Chile, noted signs of less favorable growth in the minor pine areas planted north of the Concepción zone, in drier conditions, and found clear signs of trouble from leaf cast and wind and snow damage in plantations south of the Concepción zone, where there is more summer rain, a much heavier annual rainfall, up to 120 inches (3,000 millimeters), and more wind and snow.

Soil and land available for planting

The point made by A. D. Lindsay (1937) and others that *P. radiata* thrives best, in its own home and elsewhere, with 3 to 4 feet (1 to 1.2 meters) depth of well-drained soil is confirmed by the behavior of the tree in Chile. In such classic *P. radiata* centers as Lota, near Concepción, the height at a given age and rate of growth are clearly proportional to the depth of soil available. Where the soil is shallow and lies over quartz-bearing rocks, the annual growth in height may be only 20 inches (50 centimeters) or less, compared with much faster growth on deeper and less acid soils.

An experienced forester at Lota estimates that in the provinces of Concepción and Arauco roughly 50 percent of the planted soils are less than 20 inches (50 centimeters) deep, 40 percent are between 20 and 40 inches (50 and 100 centimeters) deep, and only 10 percent are over 40 inches (1 meter) deep. It is clear, too, from personal visits to extensive plantations in the Laja and Itata drainages, east of Concepción, that where the soil is very shallow and rock or a hard pan approaches the surface the growth of the pine is poor or even stunted. A surprisingly high percentage of low quality class plantations appears in the 1953-54 sampling enumerations of all the *P. radiata* plantations in the Concepción zone. It is likely that one factor in this result is the siting of too many plantations on poorer and shallower soils, where growth and production are far below the high levels reached on better soils.

As already mentioned, there are estimated to be 3.75 million acres (1.5 million hectares), of land in the Concepción zone which are unsuitable for agriculture and available for tree planting or pasture development. There is, therefore, ample room for expansion, without using very inferior sites associated with very shallow or otherwise unfavorable soils.

The estimated average yield in Chile is little below the average in New Zealand.

TABLE 2 - EXOTIC CONIFER PLANTATIONS IN AUSTRALIA TO JUNE 1957, WITH SPECIAL REFERENCE TO *Pinus radiata* (Hall - 1951)

State	*Pinus radiata*		*Total*	% *Pinus radiata* of all exotic conifers	Future planting of all conifers	
	State	Private			Total target	Annual quota
	..... *in 1,000s of acres (hectares)*			... *Percent* ...	..... *in 1,000s of acres (hectares)*	
South Australia	97 (39)	38 (15)	*135 (55)*	95	200 (80)	3 to 4 (1.2 to 1.6)
Victoria	33 (13)	46 (19)	*79 (32)*	88	200 (80)	1 (0.4)
New South Wales	53 (21)	1 (0.4)	*54 (22)*	70	200 (80)	5 (2.0)
Australian Capital Territory	17 (7)	—	*17 (7)*	89	40 (16)	1 (0.4)
Tasmania	11 (4)	4 (2)	*15 (6)*	100	50 (20)	1.2 (0.5)
Western Australia	5 (2)	—	*5 (2)*	22	100 (40)	2 (0.8)
Queensland	1 (0.4)	—	*1 (0.4)*	3	200 (80)	5 (2.0)
TOTALS	217 (88)	89 (36)	*306 (122)*	76	990 (400)	18.2 to 19.2 (7.3 to 7.7)

All figures are approximate, rounded and adjusted to agree as nearly as possible with exact totals.

Sites used

The main effort has been on the coastal Cordillera and the plain between that range and the Andes, in the Concepción zone, as already described. A wide variety of sites has been used, from highly favorable ones with deep soil, especially on low hills near the coast, to generally poorer sites further inland, on more level ground. In these latter sites, in some cases but by no means all, the soil may be too shallow or otherwise unfavorable for high quality growth; but even on these poorer sites, excluding the worst, the production is still high and attractive, especially for pulpwood if within economic reach of a mill.

Results and potentialities

Much that has been said already in connection with New Zealand applies to Chile. The main stands of the exotic *pino insigne* are still very young, mostly 15 years old or less. Already they are helping to ease the burden on the overworked native forests by meeting a substantial share of the home lumber consumption and providing some lumber for export. The exotic stands are helping also to reduce erosion and conserve water in the coastal Cordillera and the plains. They are not planted in the Andes.

The main pulp and paper era in Chile is just beginning, is dependent wholly on *pino insigne* and has excellent prospects. The volume potential of Chile's half million acres (200,000 hectares), of *P. radiata* is formidably large. If it is to be used to advantage to all concerned, including the large numbers of small private forest owners, there is urgent need to press on with the building of pulp, paper and saw mills, roads, harbors, and all the other facilities needed to manufacture good produce and sell it wherever markets can be found and held by satisfying the consumers.

The *pino insigne* stands in the main planting zone of the country are at present extremely healthy and free of pests. It is vital to take all proper economic precautions to keep them so. Their potentialities depend on a healthy soil and freedom from disease.

AUSTRALIA

Australia includes six states and the Australian Capital Territory. Each of these seven units has a separate forest department and all seven are planting exotic conifers, including *P. radiata*. In the space available it is not easy to give even in outline an adequate account of this.

G. J. Rodger and N. Hall (1951) have shown that Australia's native conifers are only some 5 percent by volume of her total indigenous timber resources; that conifer or softwood lumber formed half the annual consumption, prior to 1939, involving heavy imports. A large planting program of native and exotic conifers was therefore adopted. In the 30 years, 1919-49, it was carried out on a substantial scale, so that by 1949, the total of planted conifers was about 300,000 acres (120,000 hectares), 87 percent state- and 13 percent privately-owned. This total included much planted native hoop pine, *Araucaria cunninghamii*, as well as exotic pines; but by 1951 the output of the exotics exceeded that of the native species, and the chief exotic was *P. radiata*, especially in the Capital Territory and all the states except West Australia and Queensland. In the two last-named, the poor soil available or the humid summers dictated mainly other pines, such as *P. pinaster* (*maritima*) and *P. elliottii*.

Further, in 1949, a new program was adopted to plant in all one million acres (400,000 hectares), of conifers, a total likely to be reached in some 35 years, at

the annual rates for the various states, allowing for the 300,000 acres (120,000 hectares), already planted. Table 2 shows the total and annual conifer planting targets named in 1949, the total area of *P. radiata* in the Australian Capital Territory and in each State at June 1957, and the percentage of *radiata* in each case in relation to all exotic conifers.

Climate

The parts of Australia with enough rain to support native forest or exotic trees are relatively limited and therefore important. In the extreme southeast of South Australia and in the extreme southwest of Western Australia there are zones with a Mediterranean climate, adequate winter rainfall and dry summers, which suit *P. radiata* well. The largest area of this pine is in the Mediterranean zone of South Australia, where good advantage has been taken of the favorable climate and suitable soil. In West Australia, the areas of soil fit for *P. radiata* are much more limited, but such as are available are being planted.

Victoria, New South Wales, the Australian Capital Territory and Tasmania offer climatic zones in which *P. radiata* thrives. It has been tried in New South Wales on a considerable scale in four very different climatic zones. It thrives only in the one zone of the four which has good rainfall mainly occurring in winter, and summer drought. All *P. radiata* planting is now confined to that zone, to such areas as Tumut-Batlow, about 60 miles (100 kilometers) WSW of Canberra, and Jenolan-Oberon, about 80 miles (135 kilometers) west of Sydney. Plantings of *P. radiata* in the summer rainfall zone at Armidale, in the coastal uniform rainfall belt at Tuncurry, and in the hot dry inland zone at Forbes have not been successful enough to be continued.

It has to be remembered that in South Australia and Western Australia and parts of Tasmania most of the planting is at low altitudes, e. g., below 1,000 feet (300 meters) above sea level. In the other states, it goes up to 3,000 feet (1,000 meters) or more. Victoria records that her *P. radiata* shows maximum growth with an annual rainfall of 35 inches (875 millimeters) or more, satisfactory growth at 26 to 35 inches (650 to 875 millimeters) and slow growth if the rainfall is under 26 inches (650 millimeters) a year.

Queensland has little available land with a suitable climate for *P. radiata* but is interesting because of its very active and successful planting of native hoop pine (*Araucaria cunninghamii*), and slash pine (*P. elliottii*) from the southeast of the United States of America, in its summer rainfall zone. It has one center in the extreme southeast of the State (Passchendaele, near Stanthorpe) where *P. radiata* appears able to grow reasonably well and avoid fungal attack. The rainfall there, 34 inches (850 millimeters) a year, is semiuniform but rather less in summer than winter, and the height is 3,000 feet (1,000 meters) above sea level. The latitude is 28° 30′ S.

Soils and land available

In the two states, South Australia and Western Australia, with considerable areas which have a Mediterranean climate much of the sandy soil, near the coast is considered almost marginal for the growth of *P. radiata*. In Western Australia similar land is considered to be too poor for that species, especially if the P_2O_5 content in the surface and subsurface soil is below 250 parts per million.

The Forest Service of Western Australia (1957) emphasizes that the P_2O_5 content is to be regarded only as an index, not necessarily a direct factor; and that cultivation of the soil may make it fit to grow *P. radiata* without any increase of the P_2O_5 as shown by analysis. Also in South Australia it has been shown that applications of commercial superphosphate may make otherwise unsuitable land fit for *P. radiata*. In both Western Australia and South Australia a lack of zinc in the soil is corrected by spraying the foliage of the young pines with a 2.5 percent aqueous solution of $Zn\ SO_4$, with excellent results. However, it is well to remember the salutary warning of the late N. W. Jolly (1950) that the pine soils of South Australia are not fertile but frequently almost marginal. Special care is needed, therefore, with fast growing pines on a relatively short rotation, that the rotation is not made too short for the sustained fertility of the soil. If it is economically possible to apply superphosphates as in agriculture, clearly this would affect the choice of a suitable rotation for maximum profit and sustained yield.

The demand for softwood lumber is so keen in South Australia and the success of *P. radiata* there has been so marked that recently somewhat better land has been provided, where forestry offers at least as good a return as agriculture. In Western Australia, the coastal sands have proved much more suitable for *P. pinaster* (*maritima*) than for *P. radiata*, and the latter is now planted and thrives mainly on the red-brown sandy loams derived from basic igneous rocks (dolerite) on the Darling Range and plateau, up to 900 feet (300 meters), above sea level. *P. radiata* does not thrive on the laterite or on the lighter colored soils derived from more acid rocks, both of which occur also in the Darling country.

Experience with *P. radiata* in the other states and the Australian Capital Territory shows that depth of suitable soil is an important factor, that basaltic soils give superior growth, and in New South Wales that the soils derived from sandstones are to be avoided, if possible. Victoria finds that sandy loams are satisfactory provided that a pervious clay layer occurs at 3 to 5 feet (1 to 1.5 meters) below the surface, but that very deep porous soils, such as sand of 10 feet (3 meters) or more in depth, are quite unsuitable in the climate concerned. The relatively large planting targets for *P. radiata* in the Australian Capital Territory and all the states other than Western Australia and Queensland, where soil or climate severely restricts its use, show that these territories all have adequate land for planting and great faith in the species.

Areas planted and future planting

Australia has planted some 305,000 acres (122,000 hectares) of *P. radiata*, to 1957, and the species forms about 76 percent of all its exotic conifers. Future planting of exotic and native conifers is planned to bring the present total of some 400,000 acres (160,000 hectares) (all species) to one million acres (400,000 hectares) in about 30 years time, at some 20,000 acres (8,000 hectares) a year. As already explained, *P. radiata* is to be the chief exotic conifer in all states except the two where soil or climate limit its use. This emphasis on *P. radiata* is striking evidence of its unique attractions in Australia for cheap production of much-needed lumber and pulp, and a challenge to the skill of the foresters responsible for the hygiene of the plantations and their soil.

Sites used

In South Australia, the limiting factors are stated to be exposure and summer soil moisture. Bracken (*Pteridium*) is a useful indicator of soil drainage and aeration but for *P. radiata* the bracken may indicate a favorable site on heavy clay land but not on deep sand, where the soil may be too poor for the pine. In the main planting area, in the extreme southeast of the State, much of the *P. radiata* is within a few hundred feet of sea level. In Western Australia, only sites with the soil character and minimum content of P_2O_5, already described, are favored, at heights up to 900 feet (300 meters) above sea level. In Victoria, as elsewhere, wet sites and too dry sites are found unsuitable, and planting is from sea level to 3,300 feet (1,000 meters). In New South Wales, the suitable height limits in the climate concerned are from 1,800 to 4,300 feet (600-1,400 meters) above sea level, with snow causing damage at the higher levels. Sites with soils derived from sandstone are avoided. At Canberra, the planting is from 1,500 to 3,500 feet (500-1,100 meters) above sea level, and the best growth is on deep red loams with 25 inches (625 millimeters) or more of annual rainfall. In Tasmania, sites are from sea level to 2,500 feet (800 meters) above it, with the best results where rainfall is about 50 inches (1,250 millimeters) a year if there is no snow damage. Queensland confines *P. radiata* to one planting center and to soils of 2 or more feet deep.

Results and potentialities

Australia stands at present only third in the magnitude of area planted with *P. radiata* but has attained a notable standard of tending and management. South Australia has 135,000 acres (54,000 hectares) of this pine, of which over 80 percent of the stands fit for thinning are under regular thinning schedules, at least in the 70 percent or more of state-owned plantations. Also in some 80 years of planting in South Australia at first on a small or moderate scale, the tree has remained free from serious pests; and difficulties due to poor soils have been overcome by research in this State and in Western Australia.

It has been shown by B. H. Bednall (1957) that, in the 15 years from 1938 to 1953, home-grown lumber production, mainly of *P. radiata*, has risen in South Australia from 14 to 62 million board feet (33,000 to 146,300 cubic meters) a year, with a corresponding rise of 19 to 48 in the percentage of total lumber consumption supplied from home-grown trees, excluding railway sleepers (ties). Not only box and case lumber has been made from *P. radiata* but also excellent flooring for houses, and many other types of lumber. These supplies have proved invaluable when imported supplies were cut off. Similar satisfactory results are believed to have been secured in the other territories of Australia, in relation to the extent and age of their plantations; and wherever the species has been used for pulp and paper it has proved most satisfactory, as in New Zealand.

The potentialities are clear from the target total of 1 million acres (400,000 hectares) of planted conifers, with *P. radiata* as the chief species, and the high yields normal when the stands are healthy and well handled. As in New Zealand and Chile, the great volume of production in sight depends on keeping the trees and soil healthy, a task in which Australian research is as outstanding as it is in the parallel task of the efficient manufacture and use of the trees for lumber, pulp and paper treated poles, posts and sleepers (ties) plywood, fibreboard and particle board.

Spain

Spain is sparsely wooded, having less than 10 percent of her total area under well-stocked forest. In spite of the dry climate of much of the country, an active policy of afforestation has produced between 1940 and 1956 nearly 2.5 million acres (1 million hectares) of new forest. A summary of the situation, especially the afforestation results and plans, is available in *Unasylva*, Volume 12, Number 1, in an article titled "The Spanish Afforestation Program" (1958). The target is 12.5 million acres (5 million hectares), without encroaching on the present agricultural land area but using much mountainous grazing land. At present, there is extensive grazing in the forests and on the potential forest land of the country, so much so that the income from this grazing is over half the income from timber on the same land. However, it is hoped to improve the grazing on one third of the land concerned to such an extent that it will carry as much livestock as the whole area has been carrying, even if the other two thirds are used for forest.

Of the 2.5 million acres (1 million hectares) planted in 1940-56 about 95 percent has been done by the State on public land, and 5 percent by private owners. It is estimated that up to 22 percent of the whole 2.5 million acres (1 million hectares) has been planted with faster growing trees, native or exotic, such as a special race of *P. pinaster* (*maritima*) from Galicia in northwest Spain, *Eucalyptus* spp., and *Pinus radiata*. The

other and slower species used have been mainly native pines such as *P. pinea*, *P. halepensis*, *P. nigra*, *P. sylvestris*, *P. uncinata* and *P. canariensis*, and poplar, the last restricted by its need for favorable soils and moisture.

The two outstanding exotics used in Spain are *Eucalyptus* spp. and *Pinus radiata*. Of the former the area planted is some 420,000 acres (170,000 hectares), which is more than half the total area of *Eucalyptus* in the Mediterranean region of Europe. Of the latter, *P. radiata*, 126,000 acres (51,000 hectares) has been planted, 39 percent by the State and 61 percent by private owners, all in north and northwest Spain, within some 100 miles (160 kilometers) of the Bay of Biscay or Atlantic. The main use of *P. radiata* is for paper-pulp and pit-props (in mines), on a short rotation of some 16 to 30 years, depending on the fertility of the site. Its production per acre per year is about six times that of the common native conifers and makes it a very attractive investment. There is, or was, a famous specimen tree in a park at Lequeitio, some 25 miles west of San Sebastian, which was 68 years old in 1928 and measured then 3 feet 9 inches (1.14 meters) in diameter, showing how the species thrives in sheltered sites on the north coast of Spain.

Climate

P. radiata thrives in the climate typical of the northern coastal zone of Spain. The drier and hotter climate typical of all other parts of Spain is favorable for *Eucalyptus* but not for *P. radiata*.

Soils and land available

P. radiata thrives in north and northwest Spain on deep, well-drained soils of high moisture retention, including siliceous clays and acid soils. The depth, the slope and the physical structure of the soil are considered to be prime factors in the moisture retention which is essential for the good growth of the pine in this zone. Large areas are reported to be available for *P. radiata* along the north coast, sufficient to grow pulpwood for all the country's present and future needs of chemical and mechanical pulp.

Areas planted and future planting

The total area planted with *P. radiata* is given in 1958 as 126,000 acres (51,000 hectares), all in the provinces of La Coruna, Lugo, Orense, Pontevedra, Santander, Guipuzcoa, Vizcaya and Alava, that is to say, between the frontier with France at the west end of the Pyrenees and the frontier with Portugal, south of Vigo: 61 percent of these plantations are privately owned and 39 percent are state owned or managed. The exact age distribution is not known, but it is understood that there are few large stands over 20 years old. The rotation in most cases is 20 years or less. Future planting depends much on the private landowners concerned and may average, perhaps, 3,750 to 5,000 acres (1,500 to 2,000 hectares) a year.

Sites used

The species does best in valleys, hollows and wherever sheltered from wind, with enough moisture and depth of soil. It grows poorly on exposed ridges with shallow soil and is there much more prone to fungal and insect attack. The yield tables show clearly the great effect of site quality on the growth, an effect which almost doubles the rotation necessary, even for pulpwood, from 16 to 30 years. It is found inadvisable to plant at more than 1,600 feet (500 meters) above sea level, owing to the usually poorer soil and risk of wind and snow damage.

Results and potentialities

As in the three other countries already considered, the results from *P. radiata* in Spain are highly satisfactory and encouraging wherever the climate and sites are favorable and the plantations have been well tended. Spanish foresters consider maintenance of an adequate density of the crop is most important, with light or moderate thinnings every three years, to avoid overcrowding, and well-controlled low pruning of the type known in the United Kingdom as brashing.

The average quality class is III, with a mean annual increment of some 172 cubic feet (true) per acre (12 cubic meters per hectare). This contrasts with average figures of about 14 to 29 cubic feet (true) per acre (2 cubic meters per hectare) per year from the common native conifers in much of Spain. Echeverria (1942, 1943, 1956) of the *Instituto Forestal de Investigaciones y Experiencias*, Madrid, gives full details on the yield of *P. radiata* in northern Spain from a large series of sample plots observed over 13 or more years in four provinces. These bulletins cover also initial spacing and thinning to different intensities, and the characteristics of the wood for pulp and paper. Martinez (1942) gives the chief fungi to which the tree is susceptible on unfavorable sites.

Most of the stands are worked on a rotation of about 20 years, with 90 percent of their produce going to the paper mills and the other 10 percent to boxes. The produce of the few stands worked on a longer rotation than 20 years is estimated as going 55 percent to pulp and paper, 25 percent to pit-props for the mines, 10 percent for shuttering for concrete, and 10 percent for other sawn lumber.

The potentialities of *P. radiata* in north coastal Spain are very good, provided the trees and soil are kept healthy. As already mentioned there is said to be an area suitable for planting which could supply all of Spain's present and future needs for pulpwood.

South Africa

The Union of South Africa occupies 472,000 square miles (1,222,480 square kilometers) and has less than 1 percent under indigenous forest, excluding savannas. It is not surprising, therefore, that exotic trees have

been planted on a very great scale, approaching 2 million acres (800,000 hectares), about one quarter by the State and three quarters by private enterprise. This total includes roughly 750,000 acres (300,000 hectares) of Australian tan wattles (*Acacia mollissima* and *decurrens*), grown primarily for the tannin in their bark, 700,000 acres (280,000 hectares) of conifers, mainly pines other than *P. radiata*, and 440,000 acres (176,000 hectares) of *Eucalyptus*. The last of the above figures relates to 1953 and the other figures to 1955-57.

R. J. Poynton (1957) gives full information on the present position of these exotics, including *P. radiata*. He mentions that the average annual increment in a typical indigenous high forest is only 35 cubic feet per acre (2.5 cubic meters per hectare) against mean annual increments of 250 to 400 cubic feet (18 to 29 cubic meters per hectare) (true) per acre in plantations of the chief exotic pine (*P. patula*) and the limited but appreciable areas of *P. radiata*, He also quotes impressive figures for 1953-54 of the total money yield from the indigenous and exotic forests, respectively. These were SA£43,000 ($120,400) from the former, and SA£4,700,000 ($13,160,000) from the exotic plantations, exclusive of SA£6 to SA£7 million ($16.8 to $19.6 million) for the bark from the Acacias, for tannin, additional to the timber, fuel and pulp revenue.

Poynton has this to say of *P. radiata* in South Africa: " The potentialities of this species are severely limited by its susceptibility to damage by hail and subsequent infection by *Diplodia pinea* and by its intolerance of infertile and poorly-drained soils. As a result, future plantings will be confined to selected sites in the western and south-eastern Cape Province. It is, however, quite the most desirable species on suitable sites in these areas, both from the point of view of rapid growth and of timber quality, and will therefore be used wherever conditions permit. Even on marginal sites it is often planted in preference to other species on the principle that the yield from a somewhat indifferent stand of *P. radiata* is likely to be better than that which could be obtained from a more thrifty stand of another species ".

P. radiata was introduced to South Africa about 1883 or earlier, at roughly the time of its introduction to Chile. The less favorable climate of South Africa, from the point of view of this particular pine, has been the chief cause of its limited use there and its replacement by the Mexican *P. patula* and other pines as the major species in the South African conifer plantations.

A special feature of the history of exotic conifers in South Africa has been the very outstanding work on the silviculture and utilization of these exotics, including *P. radiata*, by the Department of Forestry. Classic research was done and successful original techniques were developed in spacing thinning and pruning by I. J. Graib (1939, 1947), and others, and in wood technology and utilization by J. M. Turnbull (1937, 1947), M. H. Scott and R. P. Stephens (1947, 1953) and others.

Climate

The climate of South Africa has been well studied and analyzed from the point of view of exotic forest trees by South African foresters. Their system was first published by R. S. Troup (1932). A system of 15 zones is based on the amount and distribution of the rainfall, and the average temperature.

Métro (1955) summarizes and illustrates Troup's system, and shows that the eucalypts are confined in South Africa mainly to 8 of the 15 climatic zones. *Pinus radiata* is planted successfully in only 5 of the 15 zones, namely where the annual rainfall is over 25 inches (100 millimeters) and is either mainly winter rain or more uniformly distributed throughout the year, and the mean annual temperature is 55° to 64° F. (13° to 18° C.) to a much smaller extent where the annual rainfall is from 18 to 25 inches (450 to 625 millimeters), is mainly winter rain or uniformly distributed, and the average temperature is as before; and to a small extent precariously where the annual rainfall is 33 to 75 inches (825 to 1,875 millimeters), is mainly in summer, and the average annual temperature is 55° to 62° F. (13° to 17° C.).

The key to much of the climatic restriction of *P. radiata* in South Africa appears to be the bad effects of a warm humid summer, with hail damage allowing a fungus, *Diplodia pinea*, to thrive in the damp heat and enter the damaged pines, with severe or fatal injury to the trees. But, even in the absence of hail, an excess of damp summer heat has a very adverse effect on this pine, in South Africa as in all other parts of the world. In other words, the less the departure is from a Mediterranean climate, with a dry summer, the better, especially if hail or much warmth accompanies the summer rain. Poynton (1957) mentions that *P. radiata* is found hardy to frost, moderately resistant to snow, and able to withstand drought to about the same extent as *P. pinaster* (maritima). The zones where *P. radiata* thrives or grows tolerably well are on the mountains within 100 miles (167 kilometers) of the sea, roughly only in the extreme south and west of South Africa.

Soils and land available

The pine is regarded in South Africa as rather exacting as to soil, needing a moderately fertile, deep and well-drained soil for its best development, and doing poorly on acid, peaty or badly drained sites. On poor sandy soils, with little humus, such as on the upper slopes of mountains, *P. pinaster* grows better than *P. radiata*. In the uniform rainfall zone *P. radiata* specially needs good drainage; for there, on stiff clay soils or where there is a layer of impervious clay near the surface, the species is severely attacked by *Diplodia pinea*, and is stunted or not vigorous.

Areas planted and future planting

The total area of *P. radiata* in the State plantations at March 1955 was 30,000 acres (12,000 hectares), of which much had been planted in 1920-25 and 1940-55,

after a setback in 1926-1939, due to planting in unsuitable climatic zones and attacks by *Diplodia pinea*. As it became known how such failures could be avoided, the rate of planting rose again. Future planting is likely to be on a moderate scale wherever it is possible in the limited zones and sites well suited to the species.

Sites used

Cool moist sites are favored, and southerly and easterly aspects, observing that in the southern hemisphere southerly sites are cooler and moister than northerly sites. Sites exposed to sea breezes are tolerated well by *P. radiata*.

Results and potentialities

It is clear that in the limited parts of South Africa where suitable climatic and soil conditions for *P. radiata* occur the pine is an outstanding success. In such conditions, it is considered the most desirable softwood, both for quantity and quality. The fact that South Africa has a much lower percentage of *P. radiata* (8 percent) in her large total of exotic conifers than have New Zealand (60 percent), Chile and Spain (99 to 100 percent) and Australia (76 percent) in their totals, is due partly to restrictions imposed on South Africa by climate and soil, and partly to a wise policy of deliberate variation of the species planted, in order to spread the risks from epidemics. The good results obtained owe much to good tending and utilization, the fruits of far-seeing research, carried through and applied on a large scale. In South Africa, the need to study markets and the consumers' wants have been kept well in mind by the silviculturists and others responsible for growing the trees. At the same time, the health of the trees and soils has been studied to good effect. The potentialities of the species in South Africa may be rated as excellent within the limited areas suitable and available for it.

References

Bednall, B. H. *Exotic Forest Trees in South Australia.* S.A. For. Dept. Bul. 8. Adelaide. 1957. 48 pp.

Boyce, J. S. *Forest Plantation Protection against Diseases and Insect Pests. See* Food and Agriculture Organization of the United Nations, 1958b.

Champion, Sir. H., and Brasnett, N. V. *Choice of Tree Species. See* Food and Agriculture Organization of the United Nations, 1958b.

Craib, I. J. *Thinning, Pruning and Management Studies on South African Exotic Conifers.* S.A. Dept. Agr. and For. Sci. Bul. 196. Pretoria. 1939. 179 pp.

———. *Silviculture of Exotic Conifers in South Africa.* Paper, Brit. Comm. For. Conf., (Pietermaritzburg) 1947. 35 pp.

De Gryse, J. J. *Forest Pathology in New Zealand.* N.Z. For. Serv. Bul. 11. Wellington. 1955. 62 pp.

Echeverria, I. *Ensayo de tablas de producción del P. insignis en el norte de España.* Inst. For. Inv. y Exp. Año XIII: 22. Madrid. 1942.

———. *Tratamiento del P. insignis.* Inst. For. Inv. y Exp. Año XIV: 26. Madrid. 1943. 153 pp.

———. *P. insignis en el norte de España y aplicación a la elaboración de pastas de celulosa.* Inst. For. Inv. y Exp. Año XXVII: 75. Madrid. 1956. 54 pp.

Food and Agriculture Organization of the United Nations. *Forest Plantation Protection against Diseases and Insect Pests.* by J. S. Boyce. For. and For. Prod. Devl. Paper No. 3. Rome. 1954. 41 pp.

———. *Eucalypts for Planting,* by A. Métro. For. and For. Prod. Study No. 11. Rome 1955. 403 pp.

———. The Spanish Afforestation Program. *Unasylva* 12:1:3-8. 1958.

———. *Choice of Tree Species,* by Sir Harry Champion and N. V. Brasnett. For. and For. Prod. Devl. Paper No. 13. Rome, 1958. 307 pp.

Haig, I. T., *et al. Forest Resources of Chile.* USDA and CORFO. Santiago. 1946. 256 pp.

Hall, N. *Establishment of Coniferous Plantations in Australia.* Australian Jnl. Sci. 13:7. 1951.

Jolly, N. W. *Thinning of P. radiata Plantations.* S. Australian For. Dept. Bul. 4. Adelaide. 1950. 27 pp.

Lindsay, A. D. *Monterey Pine in its Native Habitat.* Comm. For. Bur. Bul. 10. Canberra. 1937. 57 pp.

Martinez, B. J. *Las micosis del P. insignis en Guipuzcoa.* Inst. For. Inv. y Exp. Año XII: 23. Madrid. 1942. 72 pp.

Métro, A. *Eucalypts for Planting.* See Food and Agriculture Organization of the United Nations, 1955.

New South Wales. *Principal Exotic Forest Trees in New South Wales.* Paper, Brit. Comm. For. Conf. Wellington. 1957. 13 pp.

Poynton, R. J. *Notes on Exotic Forest Trees in South Africa.* Brit. Comm. For. Conf. Wellington (Pretoria). 1957. 135 pp.

Rawlings, G. B. *Pathology of P. radiata as an Exotic.* Paper, Brit. Comm. For. Conf. Wellington. 1957. 16 pp.

Scott, M. H., and Stephens, R. P. *Quality of Mature P. insignis Timber in South Africa.* Paper Brit. Comm. For. Conf. Great Britain. (Pietermaritzburg.) 1947. 23 pp.

Scott, M. H. *Utilization Notes on South African Timbers.* S.A. Dept. For. Bul. 36. Pretoria. 1953. 95 pp.

Troup, R. S. *Exotic Forest Trees in the British Empire.* Oxford. 1932. 259 pp.

Turnbull, J. M. *Variations in Strength of Pine Timbers.* South African Jnl. Sci. XXXIII. 653-682. 1937.

———. *Some Factors affecting Wood Density in Pine Stems.* Paper. Brit. Comm. For. Conf. Great Britain. (Pietermaritzburg.) 1947. 22 pp.

Western Australia. *Exotic Conifers in Western Australia.* Paper. Brit. Comm. For. Conf. Wellington (Perth). 1957. 22 pp.

Methods and Machines Used in North American Nurseries

Roland Rotty
Forest Service, United States Department of Agriculture

In order to make this manual useful for a wide range of nursery situations, information regarding methods and machines applicable to several levels of mechanization are included in it. For example, where possible, descriptions are given of equipment suited to the largest of nurseries, to moderate-sized ones, and to those without self-powered equipment. Alternate methods of accomplishing the same thing under different conditions are often discussed. It is hoped that presentation in this manner will enable a user of the manual to choose practices that will best suit his local conditions, and to decide which operations he will mechanize and which he will continue under time-honored, hand-labor methods. The author makes grateful acknowledgment of the contributions of many nursery administrators and their associates in allied fields in the United States and a few in Canada. Much of the material used was taken from articles prepared by these men and published in various issues of Tree Planters' Notes, *a publication of the Forest Service, U.S. Department of Agriculture. Considerable material has also been taken from* Planting the Southern Pines *by Philip C. Wakeley, Agriculture Monograph No. 18 (1954), and* Forest Nursery Practices in the Lake States *by J. H. Stoeckler and G. W. Jones, Agricultural Handbook No. 110 (1957), both published by the Forest Service, United States Department of Agriculture.*

Site Selection

No step in artificial reforestation requires more care than does selecting the site for a permanent nursery. Good nursery sites are likely to be superior, high-price farmland. Experience has shown that buying a good site may cost far less than correcting unsuitable conditions on a poor one.

Location

A central location within the territory served by the nursery minimizes stock-shipping costs, and access to main highways, express and freight facilities, water, telephone service, labor, electric power, and cold storage are important considerations. Medical, school, and similar facilities for the nursery staff are also important.

Localities of serious insect and disease hazard, including sites infested with harmful soil fungi or nematodes, should be avoided. Determination of insect, fungous, or nematode infestation usually requires not only field examination but also laboratory and greenhouse testing and a thorough study of the past history of the site. The existence of quarantine lines that would prevent or hamper shipment of stock should be checked.

Area required

The acreage required depends on the age and species of trees to be grown, which in turn depends upon the climate of the area being reforested. In regions with a long growing season, most of the species used for reforestation will attain field-planting size in a single growing season, but in regions with a shorter season and slower growing species, from 2 to 5 years are needed to produce satisfactory field-planting stock. The acreage of nursery land required to meet an annual production quota, therefore, is a matter of arithmetic that takes into account species, season, and proper consideration of the fact that enough land must be provided to permit rotations of trees and soiling crops.

As shown in Table 1, approximately a million conifer seedlings can be produced on an acre with seedbed densities of 30 plants to the square foot. Transplanted conifers in beds with 6-inch row spacing will approximate 400,000 plants an acre. Lined-out hard-wood trees will produce 150,000 usable plants an acre.

Table 1. – Area[1] Required for 1,000,000 Conifer Seedlings at Different Combinations of Bed and Path Width and Seedling Stand Density

Seedlings per square foot	3-foot beds		4-foot beds		5-foot beds	
	2-foot paths	1½-foot paths	2-foot paths	1½-foot paths	2-foot paths	1½-foot paths
	Acres					
20	1.91	1.72	1.72	1.58	1.61	1.49
25	1.53	1.38	1.38	1.26	1.29	1.19
30[2]	1.28	1.15	1.15	1.05	1.07	0.99
35	1.09	0.98	0.98	0.90	0.92	0.85
40	0.96	0.86	0.86	0.79	0.80	0.75
45	0.85	0.77	0.77	0.70	0.71	0.66
50	0.77	0.69	0.69	0.63	0.64	0.60

[1] Including beds and the paths separating them, but not roads, cross paths, or width added to paths along sprinkler lines.
[2] Practicable average density on most nursery soils.

To insure against unforeseen losses, the total area of seedbeds and paths allowed for a given number of seedlings should be about 20 percent greater than the net area required at the desired seedling stand density.

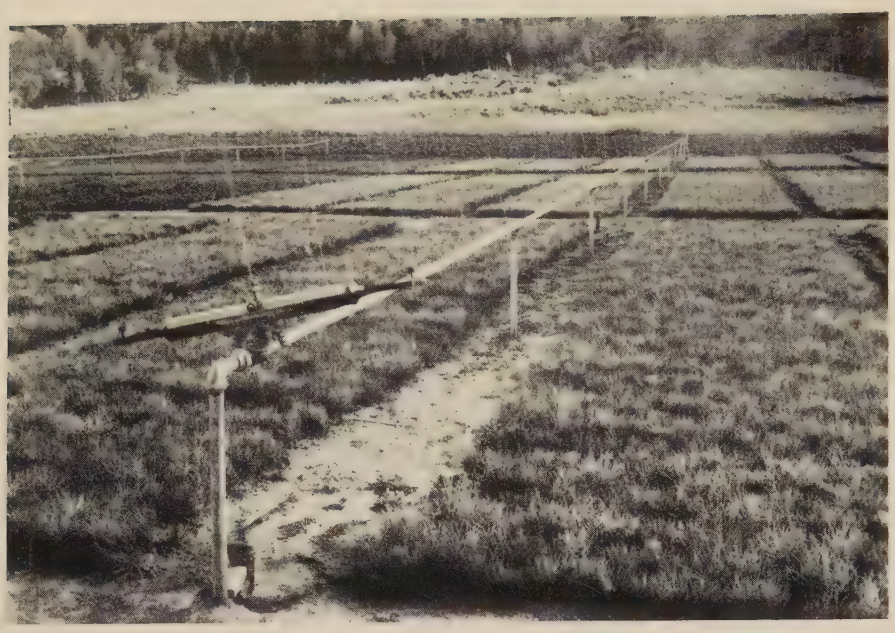

FIGURE 1. – *One type of horizontal sprinkler line with riser and oscillator.*

Courtesy, Forest Service, U.S.D.A.

This total must, in turn, be doubled if it is so planned that soil-improving crops are to be alternated annually with seedlings.

Space must be allowed for roads and buildings, and for increases in seedbed area if the planting program expands.

WATER

A prime need is a dependable water supply large enough to lay down the equivalent of 4 or 5 inches of rainfall a month over any area likely to be used for conifer seedlings. A rate of flow sufficient to apply one-half inch of water over the entire seedbed area in 12 hours or less is desirable. Five inches of water on 1 acre — ordinarily the minimum area to produce a million seedlings — requires 136,000 gallons. Residences, shops and offices, and the fire protection system require additional amounts.

Water carrying 500 parts of calcium per million is likely to raise the *p*H concentration in nursery soil and to increase damping-off, root rot, and chlorosis; water carrying 100 parts of $CaCO_3$ or 125 parts of calcium bicarbonate per million may do so. Water with a high silt or colloidal content may seal the soil surface, reduce soil aeration, and predispose seedlings to disease; the water itself may carry disease organisms. Sediment or algae in the water may clog sprinkler nozzles unless screened out.

No nursery should be established until analysis shows that the available water is free from, or can readily be freed from, harmful substances and organisms. It is well to test the water in advance of nursery establishment for a full growing season, both to see whether regular applications increase the *p*H concentration of the top one quarter to one half inch of soil over that of soil three inches down and of topsoil in unwatered plots, and to learn what is their effect on seedlings in plots or pots.

TOPOGRAPHY AND SOIL

Sites with excessive surface drainage and erosion should be avoided. Ordinarily the slope of the seedbed area should nowhere exceed 2 or 3 percent, yet the site must not be absolutely flat in order that water does not stand after rain. Subsurface drainage is as important as surface drainage. Land subject to overflow is useless.

The soil should be uniform in depth and texture as well as in slope. The best nursery soils are fine to coarse sandy loams underlain at 18 inches or slightly more by somewhat stiffer but still permeable subsoils. A stiff subsoil less than 12 inches below the surface is very undesirable.

Soils containing not less than 15 percent nor more than 25 of particles smaller than 0.05 millimeter in diameter are recommended. Such particles generally remain suspended in water when soil is mixed with water in a partly filled flask, shaken hard 60 times, and allowed to stand for 60 seconds. The larger particles settle to the bottom of the flask. More accurate special techniques and apparatus are, of course, available for such measurements. The lighter soils are better drained and easier to work than heavy soils, and permit better seedling root development. However, extremely light, loose, sandy soils (low in organic matter and with poor moisture-retaining capacity-wilting coefficient less than 4 percent) should be avoided. Those that are easily eroded by wind or water, that puddle, cake, or crust after wetting, or that contain much stone or gravel should also be avoided.

The *p*H concentration of the soil should not be above 6.5 nor below 4.5. At the higher levels, the seedlings may suffer from damping-off, root rot, and chlorosis, and at the lower levels mineral nutrients may be rendered unavailable to them.

The mineral nutrient level of nursery soils should be at least as high as that required for agricultural crops grown on former pine land, and should be capable

of easy maintenance and improvement. The great weight of plant tissue produced when seedlings are grown at ordinary seedbed densities, together with its practically complete removal during lifting, makes the drain of seedling crops upon soil nutrients severalfold that of cotton or corn.

It is thought that the organic content of nursery topsoil should not be below 1.5 percent, preferably not below 2.5 percent.

The presence of abundant mycorrhiza-forming fungi in the soil appears desirable.

If there is a choice of site, weedy areas should be avoided, especially those infested with heavy weed growth. Luxurious weed growth, however, usually indicates high soil fertility, and meager weed growth, low fertility.

The soil is the hardest thing about a nursery site to evaluate. The most dependable way is to grow several small trial beds of seedlings for 1 year, and preferably for 2 years, before the site is developed. At least one such test crop should be outplanted on average to fairly severe sites to see how the seedlings survive the first year.

Nursery Development

Irrigation systems

As planning for a new nursery begins, the first decision that must be made is the nature of the irrigation system that will be used. This must definitely be decided before any plans for layout, grading, or anything else can be fixed.

Whether the nursery is irrigated by sprinkler lines, garden hose, ditches, or flood, depends upon local circumstances. Each system has certain advantages of convenience, cost, and performance. They are described below.

Horizontal lines with oscillators

Many nurserymen prefer an irrigation system that uses permanently installed horizontal sprinkler lines equipped with hydraulically powered oscillators. The lines in Figure 1 are about 3 feet above the ground. To avoid damage from freezing, this installation has a shut-off valve of the stop-and-waste type beneath the ground surface to permit automatic drainage of the riser. If automatic protection from freezing is not needed, an ordinary valve between the riser and the oscillator would be a less expensive and more convenient installation. Hose-bib faucets installed in occasional risers is also a desirable convenience (Figure 2).

The design of mains supplying a series of risers, and the reduction of pipe diameters to maintain pressures in overhead lines as distance from the risers increases, is an engineering problem. As a general rule, companies manufacturing irrigation equipment will review nursery plans for horizontal lines and suggest any needed changes. Such a plan is illustrated in Figure 3.

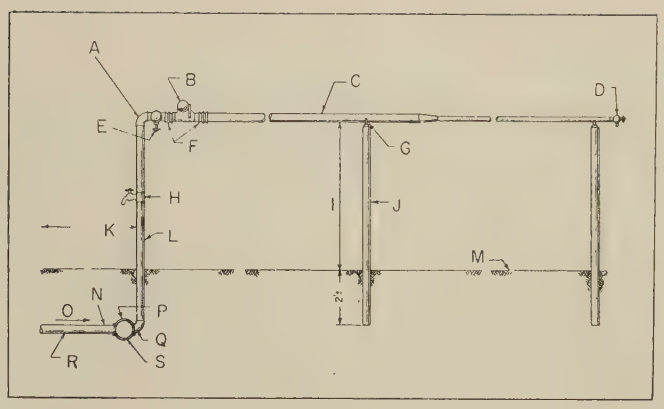

Figure 2. – *Construction details for horizontal sprinkler system.*

Courtesy, Forest Service, U.S.D.A.

A. *To avoid strain and malfunction of oscillator, use 2 street ells in place of one standard ell if slope of land will not allow line to be 90° angle to riser*
B. *Automatic oscillator, Skinner type "C" or equivalent*
C. *Galvanized steel sprinkler pipe, sizes as shown on plan*
D. *Hand-flush valve threaded for 3/4 in. hose*
E. *Brass gate valve*
F. *Quick acting couplings*
G. *Rust-proofed brass roller wheel pipe hanger*
H. *2 × 2 × 3/4 in. tee with hose bib on alternate risers, staggered on adjacent blocks*
I. *Height controlled by personal preference*
J. *Wood post or iron pipe*
K. *Roadway*
L. *2 in. galvanized riser, typical*
M. *Ground line*
N. *Line to risers on other side of roadway*
O. *Slope*
P. *Tapped iron cross if main is to serve risers on both sides of roadway*
Q. *2 in. - 90° long sweep ell*
R. *2 in. galvanized pipe*
S. *Main*

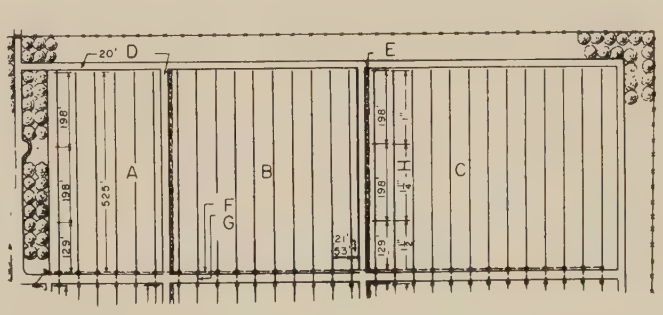

Figure 3. – *Plan of nursery with horizontal lines.*

Courtesy, Forest Service, U.S.D.A.

A. *Block* A
B. *Block* B
C. *Block* C
D. *20-ft. roads*
E. *Hedges*
F. *6-in. underground main*
G. *2-in. pipes and risers - risers 53 ft.*
H. *1 1/2-in. pipe, reducing to 1 in.*

FIGURE 4. – *Rotary sprinkler system in operation.*
Courtesy, Georgia Forestry Commission

The automatic oscillators, hydraulically powered by the irrigating water itself, move the lines slowly back and forth through whatever angle of arc between 90° and 180° is desired. Such lines lay down an even sheet of water in an area approximately 50 feet wide and as long as the length of the lines. The system has many advantages:

1. It irrigates a large area with a gentle rain-like fall of water that will not flood or erode the area. Unskilled or irresponsible labor is not likely to cause damage by washing out patches or creating floods that erode areas.
2. The amount of water applied is easily and exactly controlled, because the rate of application is known or can readily be determined by placing a few pans over the area to serve as "rain gauges".
3. The system requires a minimum of man power; after the lines are started there is nothing more that needs doing until time to shut them off.
4. Because it is self-operating, the system can operate at night or on holidays when labor is not readily available.
5. Some nurserymen operate such lines when frost threatens, and thus protect their beds from a few degrees of frost.
6. Various fertilizers and fumigants can be applied through the irrigation water by connecting one line, or the whole system at the pump, into a chemical tank by means of hose and a venturi tube.

The disadvantages are:

1. Cost of installation.
2. Need for a pump or elevated reservoir to generate 35 to 40 pounds pressure.
3. The rate of application may be slower than desired for some crops.

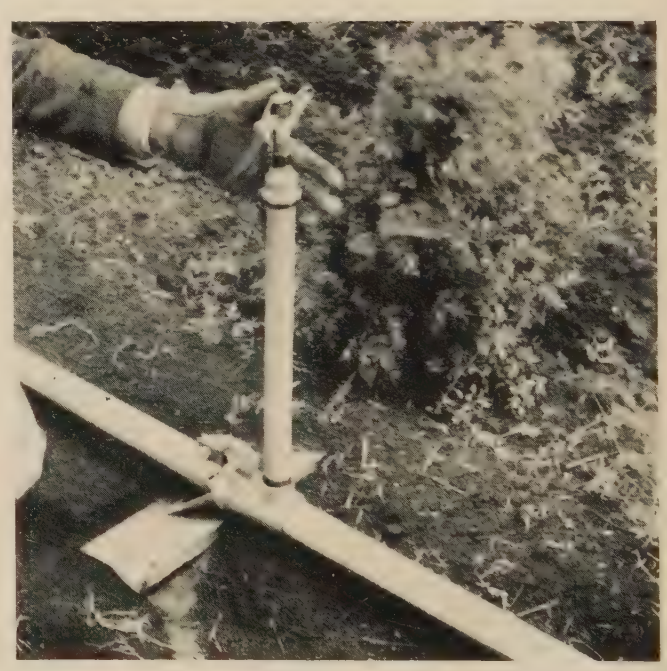

FIGURE 5. – *Detail of rotary sprinkler head and riser.*
Courtesy, Forest Service, U.S.D.A.

If the water supply is sufficient to operate only a few lines at a time, or if labor is inexpensive, oscillators need not be provided for every location. Instead, the lines may be hooked up with special, quick-action couplings so that they can be easily disassembled and moved to another location. The investment in sprinkler lines and oscillators is thereby reduced, but in the long run this economy is lost in the added labor cost and in the inconvenience and damage done in constantly moving the pipe.

Water requirements for such a system, using a common type of nozzle on 3-feet centers at 35-pound pressure is approximately 8 gallons per minute per 100 feet of length (1 pint per nozzle per minute).

FIGURE 6. – *Irrigation system with portable surface pipe.*

Courtesy, South Dakota State Nursery

FIGURE 7. – *Plan of nursery irrigated with rotary irrigation system.*

Courtesy, Arkansas State Forestry Commission

A. *Gravel drive*

B. *Center line of turn road*

C. *14 sprinklers at 40 ft. = 520 ft.*

D. *12 sprinklers at 40 ft. = 440 ft.*

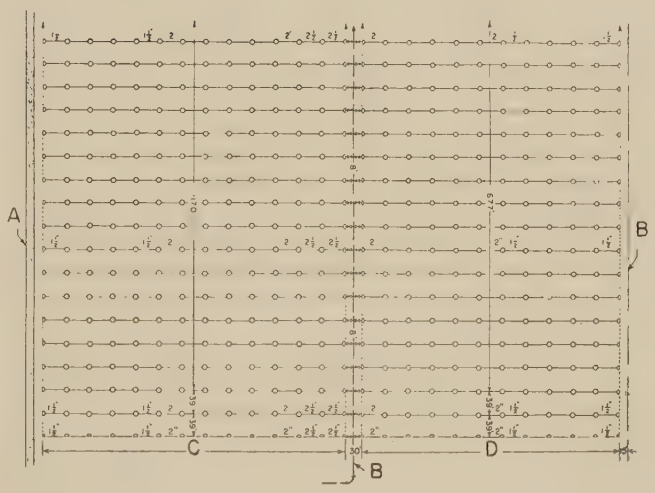

ROTARY IRRIGATION LINES

Some nurseries irrigate with rotary sprinkler heads instead of horizontal lines (Figure 4). Sprinkler heads are installed on individual risers spaced at approximately 40-foot intervals over the entire area (Figure 5). They are served by portable lines or permanently installed underground mains similar to those used in the horizontal-line system. The rotary head system has advantages and disadvantages similar to those of horizontal-line system, plus some additional as well. Some nurserymen claim that it interferes less with the use of machinery, because the risers spaced approximately 40 feet apart are supposedly easier to work among than horizontal line supports spaced about 52 by 12 feet. The system also has the advantage of permitting water to be applied at a faster rate than from a horizontal line. This may be of value when irrigating cover crops grown to maintain soil fertility.

Depending upon the particular model of rotary head, the drops of water will be large or small. If large, they can do devastating damage to newly germinated beds. Hence, heads that discharge only 5 to 7 gallons per minute at 40-pound pressure should be used. Later on, when the seedlings are large or when the area is in a cover crop for resoiling purposes, large heads with a greater discharge rate may be substituted if circumstances warrant such an expense.

The first cost of such a system can be reduced by using lightweight, quick-coupled pipe laid on the surface as laterals (Figure 6). These pipes have special slip-joint connections and are, therefore, readily disassembled and moved as required from place to place. They can be served from underground mains, or the cost of the system may be lessened even further by eliminating underground mains and using portable laterals all the way from the water source to the rotary head.

In addition to a reduction in installation cost, the portable system offers the advantage of allowing the risers to be removed from the area and thus give unobstructed space for tractors to plow and level the area after a crop is removed. A plan for a nursery rotary irrigation system and construction details for such a system are shown in Figures 7 and 8, respectively.

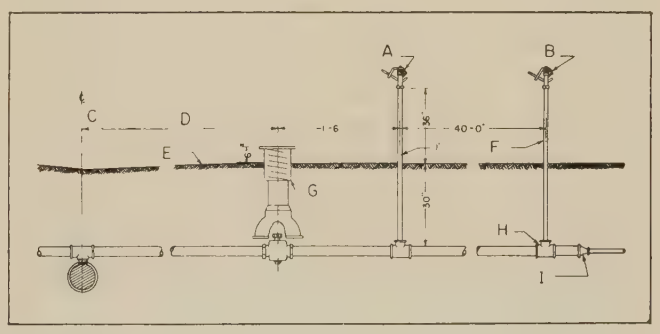

FIGURE 8. – *Construction details of rotary sprinkler system.*

Courtesy, Arkansas State Forestry Commission

A. *Part circle sprinkler head*

B. *Full circle sprinkler head*

C. *Turn road*

D. *As required*

E. *Fin. grade*

F. *1-in. galvanized pipe riser*

G. *Valve box*

H. *Screw end galvanized tee*

I. *Reduced for reduction of pipe sizes as shown on layout*

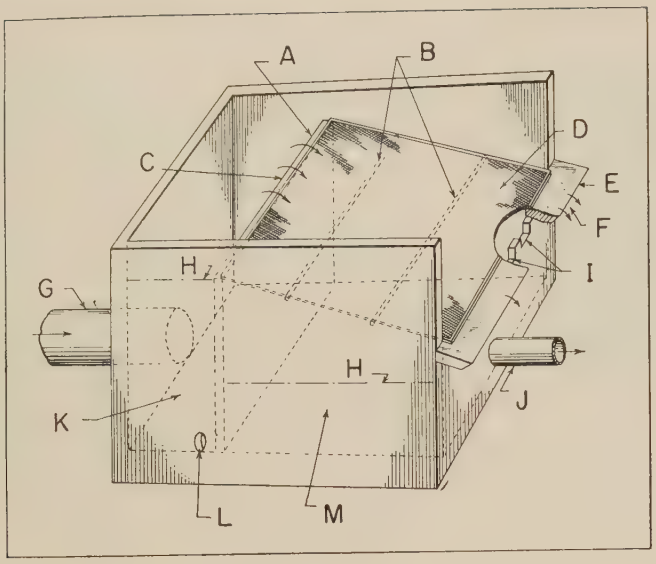

FIGURE 9. – *Plan for self-cleaning screen for piped water supply system.*

Courtesy, Forest Service, U.S.D.A.

A. *Battle wall*
B. *Supports under wire*
C. *Water flows over wall onto screen*
D. *Wire cloth*
E. *Dirt apron*
F. *Dirt spills over*
G. *Inlet*
H. *Water level*
I. *Cuts out for clean water overflow*
J. *Clean water outlet pipe*
K. *Stilling chamber*
L. *Clean and open up*
M. *Clean water chamber*

Water screening. Rotary sprinklers will operate even though the water carries small particles of debris, but the water for horizontal sprinkler lines must be screened to prevent the nozzles from being plugged. A self-cleaning screen of the type shown in Figure 9 has operated satisfactorily for years at those nurseries where it has been installed.

In its simplest form, this screening device consists of a concrete or wooden box covered with Fourdrinier wire. Fourdrinier wire is the flat-faced copper wire cloth, 60 mesh (3,600 holes per square inch), used in paper-making machines. For the water screen, it is placed smooth side up in the box at a slope of 15 to 20 degrees with suitable supports to prevent sagging. The mesh is so fine and the surface so smooth that foreign material rarely catches on it. The action of the water continually washes it clean so that it does not become clogged. Dirt and excess water pass over it and nothing but clean water passes through.

Incoming water enters through an inlet into the bottom of the stilling chamber at the back of the box. The clean water outlet is through a pipe line at the bottom of the front wall of the box. Operation of the screen is not affected by the amount of water entering the stilling chamber nor the amount of water passing out through the clean water outlet. It can be wide open or entirely closed. When the clean water outlet is closed, all water passes through the waste water outlet. Dirt and debris on the surface of the screen is continually washed down and over the water apron.

Arrangement of the nursery in general

It is unwise to begin development work without first preparing a carefully conceived ground plan that establishes the location, direction, and dimensions of the beds; roads; windbarriers; pipelines; buildings; parking areas; and storage areas; present and proposed. An accurate survey of the site and preparation of a topographic base map is a *must* for such planning.

The utmost care should be taken when planning the locations and the directions of the beds to insure that radical changes will not be needed later to improve drainage, control erosion, or reduce operating costs. Such changes can result in exorbitant costs for relocating waterlines and other structures.

A combination of 4-foot-wide beds and 1 ½ or 2-foot paths is the general rule. Most standard machinery is well adapted to this combination, and most special machinery has been designed to fit it. Paths in which sprinkler lines are placed must be at least 4 feet wide to allow machinery to clear the sprinklers.

Within limits, the longer the beds the more efficiently they can be prepared, sown, sprayed, and lifted by machinery. If the horizonal type of irrigation system is selected, the length of the beds will depend upon the length of the line that an oscillator can turn. This is usually 400 to 500 feet if the water mains cross the ends of the beds and 800 to 1,000 feet if the mains cross the middle of the beds and pairs of oscillators are used.

Surface and subsurface drainage, erodibility of the soil, and economy of sprinkler-line construction usually determine the direction of the beds. On sites with both poor subsurface and surface drainage, the beds should run up and down whatever slope there is. On sloping ground, where surface drainage is ample and there is some tendency toward erosion, beds should parallel the contours as nearly as possible. Straight beds are preferable and they should be curved to follow the contours only in extreme cases. On a nearly level site with good subsoil drainage and no erosion, the beds may be run in whatever direction requires the least amount of pipe for sprinkler lines. Where drainage and other conditions permit, it may be well to run beds and sprinkler lines at right angles to the winds prevailing during germination or during the driest weeks of the summer. Such an arrangement insures optimum distribution of water from the sprinklers and minimum water loss from the beds.

Horizontal sprinkler lines ordinarily are set 50 to

56 feet apart. The 56-foot spacing provides space for nine 4-foot beds and eight 2-foot paths between each 2 lines, and a 4-foot path under each line. This arrangement permits the use of commercially available machines, such as a spray rig equipped with the standard 16-foot boom.

The beds are usually grouped into " blocks " of a size convenient from the standpoint of accessibility for trucks and movement of machinery. The nursery shown in the frontispiece is broken into areas of approximately 5 acres by crisscrossing roads. Other nurseries find 10 acres a convenient size.

If the nursery must be built on a hillside, terraces may be essential to erosion control. They must be expertly placed and built, and well maintained, or they may do more harm than good. Sprinkler lines and straight beds should parallel terraces as closely as possible. Some effective seedling area usually is lost where beds cross terraces, although properly shaped terraces seldom need hamper machine sowing, spraying, or lifting (Figure 10).

So far as slope, drainageways, and terraces permit, it pays to keep beds uniform in size. Beds of exactly equal size greatly simplify fertilizing, sowing, spraying, and machine operation, and they particularly simplify nursery inventory and cost accounting.

Windbarriers

In regions of strong, drying winds, windbarriers around and within the nursery are essential if the area is 20 acres or more in size. Provision should be made for them in the nursery layout plan along with the roads, ditches, buildings, and other structures. As a general rule, belts of trees offer some protection for distances of 10 to 15 times their height. They should be located on the windward side of the nursery and parallel to the beds to give maximum protection and yet not interfere with nursery operations. In mechanized nurseries, long beds or rows are essential to efficient machinery operation. Hence, the rows or beds should not be interrupted by cross hedges or cross fences any oftener than is absolutely necessary.

Because newly planted windbarriers will not afford much protection, it may be desirable to retain strips of natural timber when clearing a nursery site (Figure 11). For example, strips 20 or 30 feet in width with a spacing of about 600 feet between strips might be preserved. Since such natural strips usually suffer considerable mortality from sudden exposure, breakage and uprooting, reinforcement planting may subsequently be necessary unless they are wide enough to withstand the loss of a few trees without reduction of effectiveness.

Some nurseries also use interior hedges of trimmed conifers at intervals of about 100 feet. Such hedges may suppress growth in adjoining seedbeds, but this effect can be reduced considerably by passing a knife-blade trencher, a plow, or a rolling coulter parallel to the hedge and several feet away from it at 3-year intervals.

Some nurseries use slat-wire snow fence in place of hedges. Nurseries with horizontal sprinkler lines find them to be a convenient support for such fencing.

Figure 10. – *This nursery is laid out with very long beds and a low terrace to provide unobstructed use of machines. It is in a locality not requiring interior windbreaks.*

Courtesy, Forest Service, U.S.D.A.

FIGURE 11. —*View of nursery with exterior wind protection from native timber and interior planted windbreaks.*

Courtesy, Forest Service, U.S.D.A.

ROADS

An adequate road system, carefully laid out and well maintained, is essential to the efficient operation of a nursery. Major improvements such as warehouses, compost pits, and cone storage facilities must be accessible. Interior roads should be wide enough to provide turning space for tractor-drawn equipment. A 20-foot road width is a minimum for operating and turning most types of equipment, and 30 feet is recommended, particularly for large nurseries where mechanization of nursery operations is proposed.

An application of crushed rock or fine gravel ordinarily is desirable for main roads. The surfacing should be confined as nearly as possible to a 10- to 12-foot strip down the center of the road. Care should be taken to keep the surfacing material from spreading onto the production areas and becoming mixed with the nursery soil. This is particularly important if the surfacing material contains calcareous rock or fine materials that would lower the acidity of the soil.

LAND CLEARING

Areas that have been in farm crops or pasture do not present so serious a problem as do those that must be cleared of brush, stumps, and tree growth. To maintain uniform fertility, the surface soil must not be disturbed more than is necessary; therefore, heavy equipment such as bulldozers should not be used for bunching trees and brush. Rather, the trees should be cut and the stumps pulled or removed by blasting. If possible, the slash and brush should be hauled from the area, rather than piled and burned in place.

EARTH MOVING

The amount of leveling that is necessary will depend upon the topography and the nursery practices to be used, particularly the method of irrigation. Leveling should be avoided if possible and otherwise held to a minimum because moving the topsoil complicates the maintenance of a uniformly fertile nursery soil. When it is necessary to do a major job of leveling, the topsoil should be pushed aside and then spread back on the area after the subsoil has been excavated. This operation can be accomplished with a bulldozer, land plane, or road maintainer.

When the site has been cleared, a heavy plow especially designed for breaking new land should be used. This type of plow is sturdily constructed and stands up under use on land infested with roots, small stumps, and clumps of brush. After being plowed, the land should be disked with a heavy tandum disk to cut up the sod and hasten deterioration of the vegetable material.

Disking should be repeated and followed by harrowing with a spring-tooth harrow until the land is thoroughly tilled. Pieces of stumps, roots, limbs, and stones should be picked up and hauled off the area. Low areas, almost unnoticeable otherwise, often can be detected readily after heavy rains.

It is very important that the nursery soil be in good tilth and as free of weeds as possible for the production of conifer seedlings. Therefore, pasturelands or areas that have been in heavy sod for a long time preferably should be planted to a cultivated crop or kept fallow before being converted to nursery use.

Machinery Tools and Equipment

A standardized list of equipment, universally applicable to the production of any given unit of trees, is not possible because conditions and requirements differ too much between nurseries. The operation of a nursery is essentially a farming operation; the common farm machinery, such as tractors, plows, harrows, and the like, are used to till the soil prior to planting the crop. For the specialized nursery operations of sowing, transplanting, root pruning, and lifting, special machines are required. Ordinarily they can be assembled from standard parts or modified from commercial machines in a local machine shop. Throughout various sections of this manual, descriptions are given of such specialized equipment. Some general instructions that are intended to aid in the selection of equipment follow.

Traction equipment

In choosing a tractor, the nurseryman should consider the jobs and the character of the soil on which the tractor will be used. Pulling the tree lifter through the beds at a depth of 8 to 10 inches will probably be the heaviest job. Consequently, where only one tractor is available, it should be of a size adequate for that job. If the nursery is large enough to justify having two tractors, one large tractor and one small tractor is best.

The wheel-type tractor is preferred to the crawler type for general nursery work, because it is more maneuverable and less expensive to operate. One with 33- to 35-drawbar horsepower is satisfactory for heavy work, such as plowing, disking, or pulling the tree lifter; for light work, such as drawing a utility trailer, mechanical seeder, or fertilizer spreader, 15- to 18-drawbar horsepower is adequate.

Ground preparation equipment

A sturdily constructed plow and disk harrow usually are required for breaking new ground or plowing old fields that have brush or a heavy sod. Following initial ground preparation, a 16-inch, 2-bottom plow, or a 26-inch disk plow with disks 10 to 12 inches apart, is a very effective tool for turning under soil-improvement crops and doing general tillage work. Disk plows and chisels are favored by some as a safeguard against formation of a plow sole.

Where dead furrows are a hindrance in maintaining a level seedbed, a two-way plow is useful. It is fitted with both a right- and left-hand bottom, and, when plowing back and forth across the field, it throws all the furrows one way.

A spike-tooth harrow aids materially in breaking clods and can be used effectively for leveling the ground. Various depths of penetration can be obtained by adjusting the angle of the spikes. The width of cut varies with the size of the single section and the number of sections hooked together and pulled abreast as a unit.

The spring-tooth harrow is useful for shallow cultivation in the final preparation of seedbeds. It can also be used to dig out persistant grass rhizomes and noxious weeds, and to rake debris to the surface. Depth of penetration is governed by changing the pressure on the teeth. This tool is made in sections, and the width of cut is governed by the number of sections assembled as a unit.

After being cleared or cultivated, the land usually can be leveled with a " float " drawn across the field at right angles to the direction traveled earlier by the harrow. The nurseryman can build a " float " by lapping four or five 10- or 12-inch planks (8 to 10 feet long), securely fastening them together with bolts or spikes, and bracing them across the top to give the unit rigidity. Short lengths of chain fastened 24 to 30 inches from the ends of the front plank will serve as a hitch. Extra weight or pressure can be obtained by using stones or sandbags as ballast. (See also the smoothing disk harrow pictured in Figure 15, page 27).

A " land plane " as described in Figure 12 is useful for moving soil into hollows 4 or 5 inches deep and several yards across.

The rotary tiller is a new tool that in effect plows, disks, and harrows in one operation (Figure 13). It has proved satisfactory for preparing ground and working compost and green cover crops into the soil. Also, this tiller is ideal for preparing a very loose, friable seedbed in light sandy soils. However, it has the disadvantage of destroying crumb structure and so making the soil more than normally subject to wind erosion. Experience in some nurseries indicates that the rotary tiller is effective in destroying some insect larvae, such as white grubs, which infest the soil and feed on the roots of seedlings.

This tool has a high-speed rotor equipped with tines that pulverize and thoroughly mix the soil. The very small models are compact, self-propelled units, and the larger ones, which vary from 3 to 6 feet in width, operate from a power takeoff or are powered by an engine mounted on the forward part of the machine. The power is transmitted by a double universal joint and spiral bevel gear to the rotor assembly. A hood mounted over the rotor confines the pulverized soil to the area being tilled. Depth of tillage is accurately controlled by adjustments provided by the rotor lifting bar.

The ordinary farm grain drill can be used in a nursery to advantage for seeding cover and green manure crops. These machines are adaptable to sowing grain, grass, and legume seeds, and can be adjusted to sow at desired rates per acre. Since slightly better results can be obtained if the seed is firmly packed, drills equipped with packing attachments are recommended for use in sandy soils. Experience has shown that an 8-foot drill is better adapted to nursery requirements than either a wider or narrower drill. Grain drills can be obtained with attachments for fertilizing the crop at the time of drilling the seed.

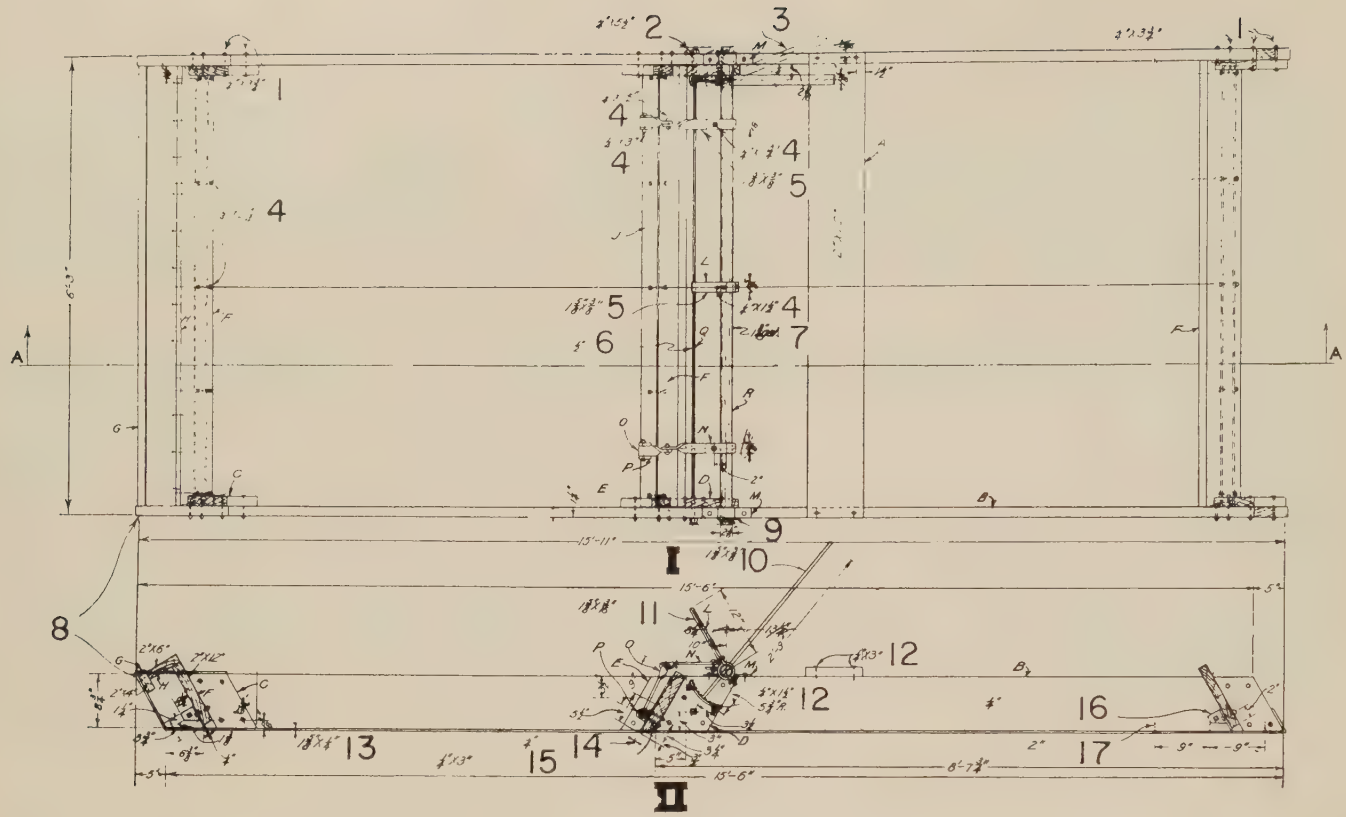

FIGURE 12. – *Construction details for Bessey land plane.*

Courtesy, Forest Service, U.S.D.A.

I *Plan*
II *Cross-section* A-A

1. *Carriage bolts*
2. *Bolts through ratchet*
3. *Dotted lines indicate side thrust of ratchet lever*
4. *Bolts*
5. *Strap iron*
6. *Tie rod*
7. *Iron pipe*
8. *3/4 in. hole at each end for cable connection*
9. *Washer and cotter pin at each end*
10. *Strap iron lever*
11. *Strap iron handle*
12. *Lag screws*
13. *Strap iron runners*
14. *1/4 in. steel plate*
15. *1/4 × 3 in. bolts with countersunk head*
16. *1/4 in. iron plate bolted to crosspiece and sides*
17. *2 in. screws spaced 9 in. apart full length of runner*

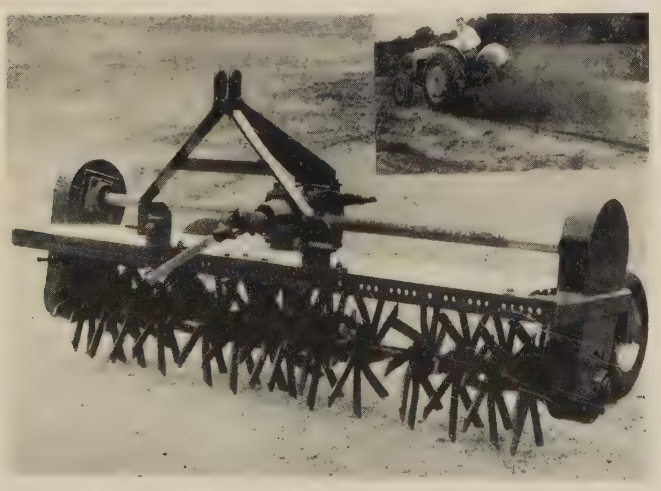

FIGURE 13. – *Rotary tiller.*

Courtesy, Agricultural Engineering Research Division, U.S.D.A.

Two-wheeled trailers with a gauge sufficient for them to straddle the beds are invaluable when placing shade, handling mulch, or doing other jobs directly upon the beds. The type shown in Figure 14 is an example of such a trailer. There is no standard design, because they are usually made at the nursery from worn out truck or auto chassis.

Seedling Production

PREPARATION OF SEEDBED AREA AND SEEDBEDS

In large nurseries much or all bed making and finishing is done with regular agricultural machinery and special bed-shaping equipment, usually tractor drawn. Handwork is limited to odd corners, to places where beds cross terraces, and to occasional final smoothing or freshening of the bed surface.

The beds must be worked when the soil is neither too dry nor too wet, especially the latter. If too dry, it is hard to break up clods or reach the proper depth. If too wet, puddling and clodding may result with consequent injury to the crop and an increase in the cost of later cultivation and weeding.

Plowing must be deep, at least 8 or 9 inches, to permit good development of seedling roots. Harrowing must be deep and thorough for the same reason, and to provide good conditions for seed germination. The most suitable implements depend largely on the soil, and usually can be determined by noting which types work best on similar soils nearby. A type that does a thorough job of breaking clods and leaving a smooth surface is shown in Figure 15.

Beds should be free from any coarse organic material likely to make the surfaces uneven or to prevent good establishment of seedlings. Winter cover crops of moderate volume must be turned under 4 to 6 weeks before final bed preparation; heavy crops, considerably earlier. Only well-decomposed or finely divided compost or other organic matter may be applied safely just before the beds are made up.

Sparse or moderate crops of annual weeds should be destroyed by plowing or harrowing a little in advance of bed making. Abundant or carryover weed crops may require repeated working during a considerable period in advance of sowing.

Heavy soils, heavy subsoils with poor subsoil drainage and very level sites with poor surface drainage all call for beds raised above the nursery paths. Usual elevations are 3 to 4 inches, but in extreme cases beds are built up 6 inches or more above the paths. On soils that erode easily, or on very sandy or otherwise dry sites, beds should be kept low. Local observation and experience are the best guides to the optimum elevation which may differ from place to place in the nursery.

Theoretically, the surface of the bed should be flat on ideal soils, slightly rounded on the less well-drained soils, and slightly troughed on droughty soils. However, rounded beds have shown little practical superiority, and in most mechanized nurseries bed surfaces are made flat regardless of soil.

FIGURE 14. — *Home-made flatbed trailer.*

Courtesy, Forest Service, U.S.D.A.

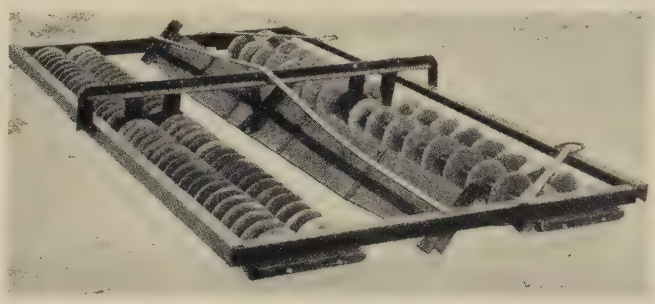

FIGURE 15. — *Clod breaker and smoother.*

Courtesy, Larchmont Engineering Company

Some nurseries require sideboards above the ground to reduce wind or rain erosion and to support protective screens (Figure 16). The boards are put in place after the area is prepared but before sowing. Such boards

FIGURE 16. – *Seedbeds with sideboards to support slatting for shade.*

Courtesy, South Dakota State Nursery

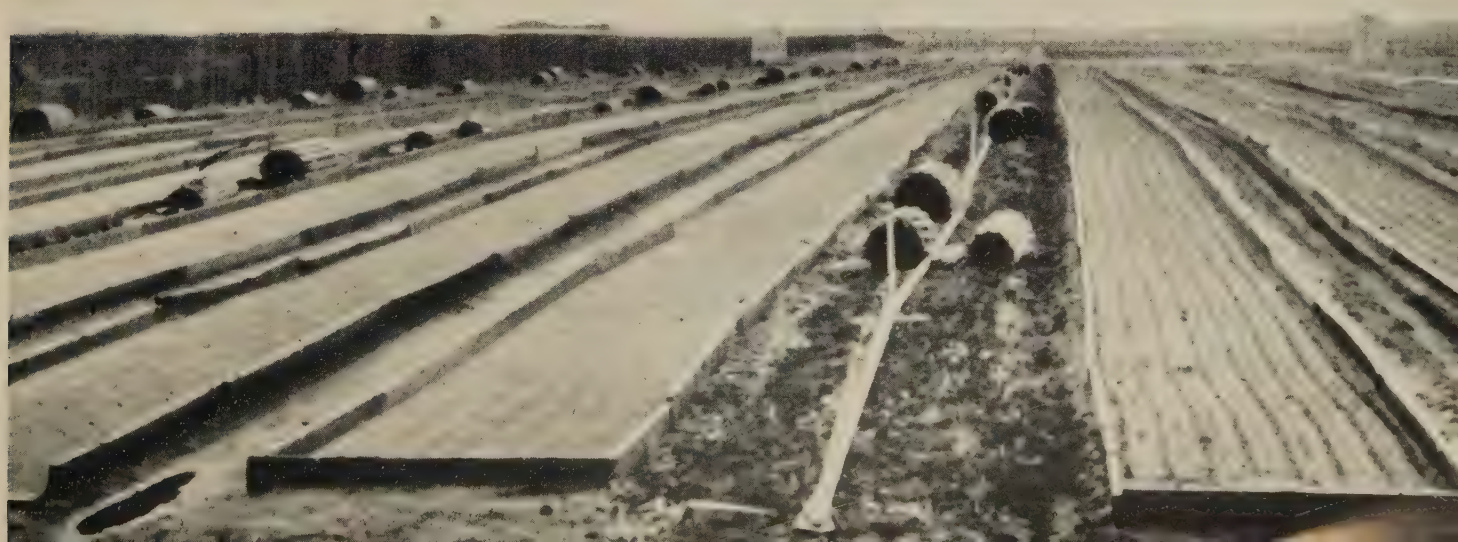

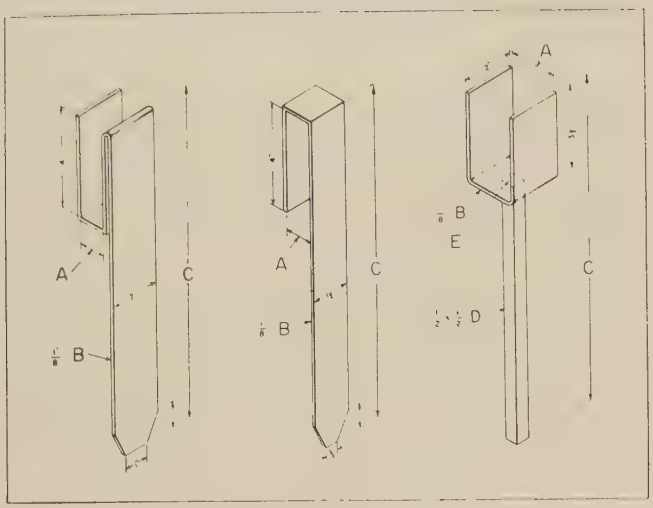

FIGURE 17. – *Various types of sideboard supports.*

Courtesy, Forest Service, U.S.D.A.

A. *Width to fit side board material used*
B. *Strap iron*
C. *Length appropriate to texture of soil*
D. *Iron bar*
E. *Weld bar to strap iron*

may be rough, low-quality lumber, but should be of some rot-resistant species. If such boards are creosoted to reduce deterioration, they should be weathered for at least a year before use because the creosote might leach out and kill seedlings. The boards can be supported in any convenient manner. Several models of such supports are shown in Figure 17. Some nurseries that use great quantities of sideboards find it more economical, because of high labor costs, to use iron supports of one design or another (Figure 18).

FIGURE 18. – *Seedbed sideboards with supporting pegs of iron.*

Courtesy, Forest Service, U.S.D.A.

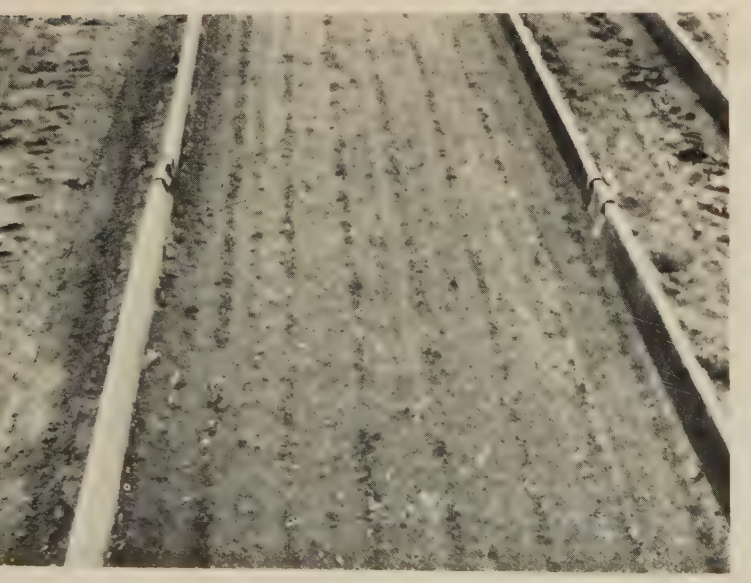

The use of sideboards to support the sides of raised beds should be avoided if at all possible, because their original cost, the cost of installation and removal, and their deterioration during use can be extremely expensive in a large-scale operation. Today almost universal practice is to add an unsown shoulder on each side of the bed. Three-inch shoulders are wide enough on most soils, but 6 inches may be needed where beds are high above the path and the soil erodes easily. Since the shoulders are on the same level as the beds, they offer no obstruction to mechanical seeders. The unsown shoulders gradually wash or are trampled down into the paths, until by lifting time the beds are reduced almost exactly to 4 feet and the paths widened to a full 2 feet. This assumes, of course, that the nursery uses 4-foot beds on 6-foot centers.

At large nurseries, beds are shaped by attachments to farm tractors, or by special bed shapers. The best of these devices space beds accurately with no guides except stakes at each end. The bed former in Figure 19 has two disks that churn up the soil and throw it toward the center. They may be raised or lowered, and turned at any angle required to handle a particular soil condition. Behind the disks are two angled leveling boards that work the soil toward the center where a third leveling board, as wide as the frame, completes the shaping operation. Two rows of small disks follow to smooth and pulverize the soil. This machine is designed to operate from a tractor that has a 3-point hydraulic tool-bar hitch. Modifications of it, made locally, are in use at many nurseries.

In some soils it may be desirable to let the beds settle before sowing. Hand-shaped beds are sometimes settled by allowing rain to fall on them a few times and then releveling and freshening the surface just before sowing. Generally it is quicker and equally effective to roll the beds before or after sowing, or both, with 300- to 400-pound metal or wooden rollers, preferably 4 or 5 feet in diameter. Where tractor-drawn bed shapers and mechanical seeders are used, the weight of the bed shaper partly settles the beds, and the rollers in the mechanical seeder complete the process. With such equipment, settling by rain or special rolling is unnecessary.

FIGURE 19. – *Nursery bed former.*

Courtesy, Larchmont Engineering Company.

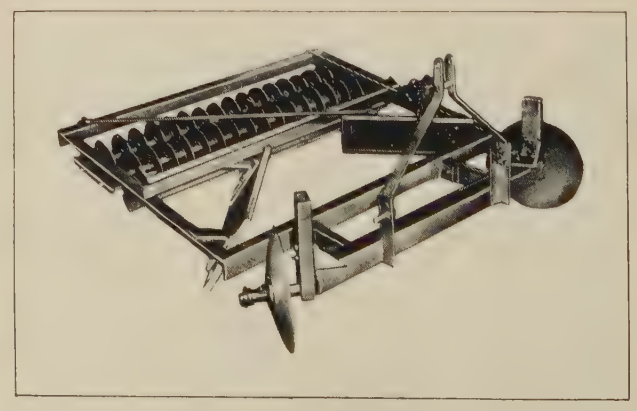

Final pulverizing of the seedbed surface can be done either by the mechanical bed shaper or with hand rakes. Surfaces that have dried in the sun or become crusted by rain are freshened by dragging or by hand raking immediately before sowing to permit rolling the seed into at least moderately moist soil.

Methods of sowing

Hand sowing

Uniform hand sowing of seed is quite possible, but such sowing is time-consuming and requires considerable care. As an aid in obtaining this uniformity, each bed and the seed for it should be divided into equal parts, and each subdivision sown with about three fourths of the seed allotted to it, after which the readily apparent thinly sown parts can be touched up with the remaining one fourth.

Hand sowing, either in drills running crosswise of the bed, or broadcast, remains preferable to machine sowing in very small nurseries and in certain test plots in large ones. Crosswise drills, usually sown 6 inches apart, are easier to hand weed than drills running lengthwise, especially in 5-foot beds.

The "Bateman" seed trough (Figure 20), which is opened to drop seed, closed again, and moved along the bed by tall handles, is a most effective device for sowing crosswise drills by hand. Two men with suitable measures cut from some box or tin can scatter seed in their respective halves of this trough. They can drill sow about 100 linear feet of either 4-foot or 5-foot wide bed per hour.

Figure 20. — *Seeding with a Bateman seed trough.*

Courtesy, Forest Service, U.S.D.A.

Machine sowing

It is important that uniform stands of seedlings or cover crops be obtained. Although seeding by hand can be done quite successfully by trained and experienced help, it cannot be done with the uniformity and speed that is obtainable with mechanical seeders.

With a machine, seedbeds may be sown either in drills running lengthwise of the beds, or broadcast. Drills are essential if the seedlings are to be side-dressed with dry fertilizer or cultivated during the growing season. Some nurserymen feel that seedlings in drills can be lifted with less root injury from stiff soils than those in broadcast beds. With present-day methods, however, especially those of weeding by use of chemical sprays, broadcast beds cost no more than drill-sown beds to sow or weed, and they seem likely to replace the latter in many nurseries. Broadcast sowing reduces some diseases — for example, sand-plash damping-off of longleaf pine — and theoretically permits better development of seedlings than does drill sowing.

At nurseries where the seed is sown in drills, a spacing of 6 inches center to center is commonly used. On a 4-foot bed, this arrangement permits eight drills between the two protective shoulders. To leave maximum clearance for cultivator and fertilizer attachments, the drills should be as narrow as the nurseryman believes appropriate for the species being planted. To gain such added width between drills, some nurserymen sow only six or seven drills on a four-foot bed, but increase the number of seedlings per foot of drill. Six drills is about the minimum without seriously overcrowding the seedlings in each drill or reducing the number of seedlings per bed.

Figure 21. – *Tree seed sowing machine.*

Courtesy, Forest Service, U.S.D.A.

The unit in Figure 21 is operated from a tractor that has a threepoint hydraulic tool-bar hitch. Each seeder unit is mounted separately to permit individual movement over holes or obstacles without affecting the other units. All units are adjustable laterally to any row width or number of seeders desired to a maximum of eight, as shown. This machine can be changed from a drill to a broadcast seeder by removing the parts below the ends of the flexible tubes and substituting a splashboard on which the seed strike as they fall to the ground.

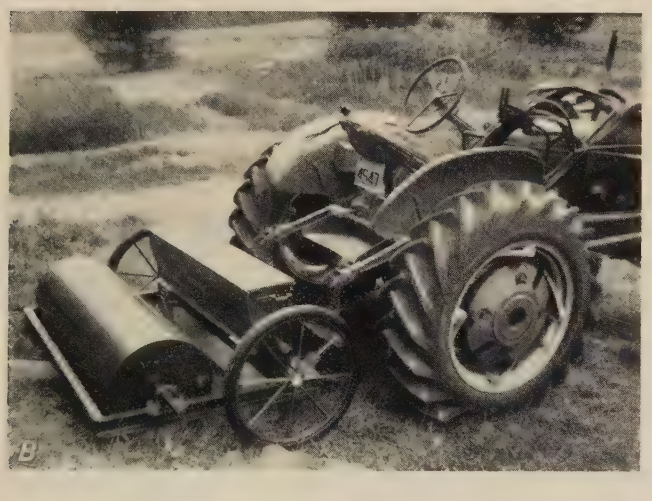

FIGURE 22. – A. *Frame for broadcast sowing machine. Note uprights to hold axles of seeder, and flange and holes to hold bushings of roller axle.*

B. *Broadcast sowing machine and roller on frame. A 2-in. block of wood between the frame and roller bushing was required to insure that the seeder's wheels were on the ground when uneven bed surfaces raised the roller and frame a little higher than normal.*

Courtesy, New Hampshire State Nursery

A few models of tree seed sowing machines are commercially available. There are also a number of all-purpose agricultural and garden seeding machines that can be used with little or no modification for sowing seed of many species of trees.

Some nurserymen prefer to build their own machine and combine such features as a roller and a sand spreader with the seeder. The seed cups and seed tubes that convey the seed from the hopper to the seeding assembly can be selected from the many models of commercial farm seed-drill parts. The seeding assembly parts, including an adjustable furrow-opening shoe, a furrow coverer, and a packing wheel mounted on a frame, can be taken from commercial hand-pulled seeders. A clever man, aided by a seeding machine parts catalogue, can assemble a completely satisfactory machine if he cannot or does not wish to buy a commercial model.

FIGURE 23. – *Over-all view of seeding crew with manual equipment. Not shown is the screen for sifting the soil used in the sand spreader.*

A. *Surface shaper.*
B. *Seeder.*
C. *Roller.*
D. *Sand spreader.*

Courtesy, Forest Service, U.S.D.A.

FIGURE 24. – *Manually operated seedbed shaper and tracks. The worker with the scoop shovel placed or removed soil ahead of the shaper to expedite its work. The shaper worked best in very loose soil.*

Courtesy, Forest Service, U.S.D.A.

FIGURE 25. – *Manually operated sand spreader.*

Courtesy, Forest Service, U.S.D.A.

Machines can be designed to sow seeds of various conifers at different densities. For the larger seed, the rate of sowing is regulated by a change of gear ratios and a change in the size of the seed cup opening in the bottom of the hopper. For the very fine seed, seed cup reducers are inserted. A mechanical drill seeder can also be used for a few of the broadleaf species, such as mountain ash, yellow birch, and black locust. Maple and ash seed, whose wings are difficult to remove, and acorns and nuts, can best be seeded by hand in small, open furrows.

A broadcast seeder of simple design and completely satisfactory for many species of conifer seed has been devised at the New Hampshire State Nursery. A commercially available special fertilizer spreader and seeder is combined with a roller on a simple iron frame suspended from a tractor 3-point hydraulic tool-bar hitch (Figure 22). The seed, broadcast on a loose seedbed surface and in a sandy soil, will be covered sufficiently by action of the roller following the seeder. According to soil texture and moisture content, the weight of the roller can be varied by partly filling it with water to obtain the degree of covering action required.

If only a few hundred linear feet of seedbeds are required, hand-drawn equipment to shape the beds and place and cover the seed may be more practical than tractor-drawn machines. Figures 23 through 28 show the machines that served this purpose well for many years prior to mechanization at a United States Forest Service nursery in Nebraska. The nursery has an annual capacity of several million trees. The seedbed tracks were 2- by 4-inch strips of wood laid end to end and fastened to the ground with inverted U irons driven through holes in their ends. A shaper on flanged wheels was pulled over the tracks (Figure 24) when it was necessary to smooth the surface prior to sowing the seed by hand or machine. After seed sowing, a light roller (Figure 23, C.) was pulled over the bed to press the seed into the soil, and then the bed was covered with sifted soil from a sand spreader (Figure 25). Trials should

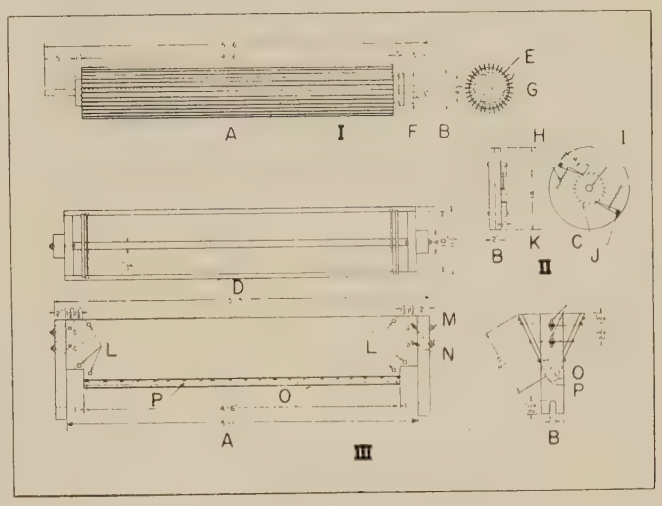

FIGURE 26. – *Construction detail of manually operated sand spreader.*

Courtesy, Forest Service, U.S.D.A.

I *Roller*
II *Wheel*
III *Sand carrier*

A. *Side view*
B. *End view*
C. *Inside view*
D. *Top plan*
E. *1/4-in. by 1 1/4 in. steel fins set into roller body*
F. *1-in. diam. shaft*
G. *Ratchet nailed to end of roller*
H. *Screen door spring to keep pawls in place*
I. *1-in. hole*
J. *1/2 × 3 1/2-in. bolt*
K. *Position of ratchet*
L. *1/4-in. brace rods*
M. *1/2-in. carriage bolts*
N. *Lag screws*
O. *2-in. rubber strip*
P. *1-in. leather strip*

FIGURE 27. – *Screen used for sifting soil for the spreader. The screen followed along close to the spreader and the soil was scooped as needed from adjacent unprepared areas.*

Courtesy, Forest Service, U.S.D.A.

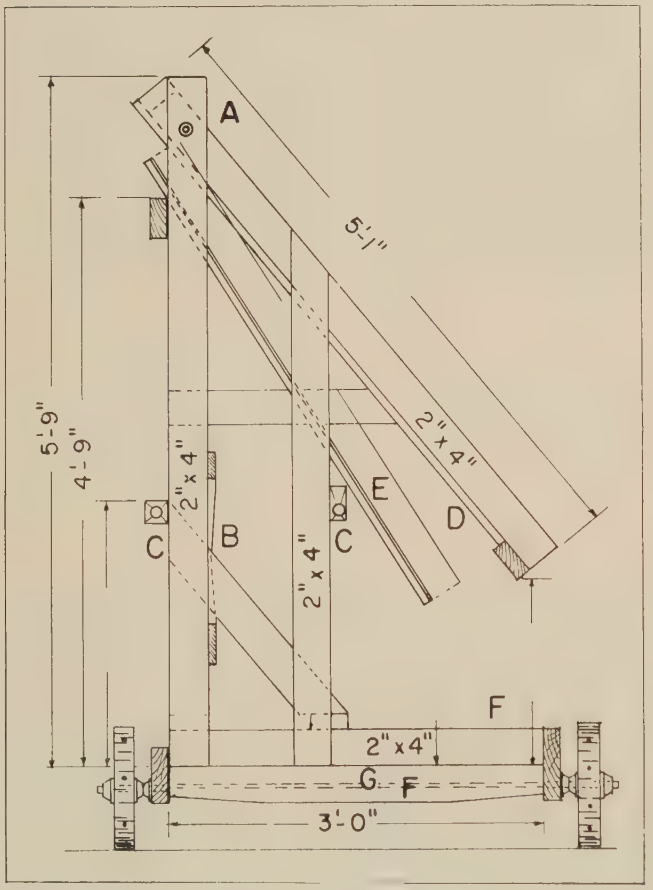

FIGURE 28. – *Construction detail for sand screen (side view).*

Courtesy, Forest Service, U.S.D.A.

A. *Carriage bolt*
B. *Cross brace*
C. *Handle*
D. *Cleat*
E. *Cleat at joints*
F. *Platform for sand box*
G. *3/4-in. galvanized iron pipe axle*

be made to determine whether rolling is necessary, because some nurseries find it possible to omit this step; others use the roller and then omit the covering; still others must both roll the seed and apply the covering.

COVERINGS FOR SEED AND SEEDBEDS

Seed covering with soil or sawdust

Covering seed with soil is a practice that cannot be prescribed for all nurseries. Some do nothing more than press the seed into the bed surface without further covering; others apply the covering as a part of the seed-sowing job by equipping the seeding machine with rollers and scrapers under the seed tubes to cover the seed with seedbed soil. At the other extreme are nurseries that apply 1/4 inch or more of sand, or sifted soil, or sawdust, or a mixture of these, on top of the seed, either from a hopper built on the seeding machine or from a separate sander that follows behind. Only tests will determine what is right for a specific nursery.

A sifter built on a trailer to pull behind a tractor has been developed at the State nursery in Lansing, Michigan, to apply a covering of sand or sawdust. It consists of a tractor-trailer with a box to carry a quantity of the covering material. In front of this box a sifter is suspended between cross members in the trailer frame by four pieces of strap iron 8-inches long. The sifter frame is made of 1 1/2-inch angle iron 14 inches wide and 4 feet long. Inside the frame, resting on the angle iron is a removable sifter made of a sheet of hardware cloth fastened to a wooden frame. The sifter is filled by two men who ride on the trailer and scrape the sawdust or sand into it (Figure 29). Since the sifter lies loose on the angle iron, it may be lifted out and cleaned.

This nursery has three wood-frame sifters with different size mesh hardware cloth — 1/4 inch for sand, 3/8 and 1/2 inch for sawdust. By adjusting the screen and the speed of the tractor to the material to be sifted, the desired thickness of cover can easily be obtained.

FIGURE 29. – *Sand spreader for tractor trailer.*

Courtesy, Forestry Department, Michigan State University

A shaft with two universal joints transmits the power from the power take-off of the tractor to the sifter (Figure 30). This makes it possible to turn at a sharp angle to enter the seedbeds without disconnecting the drive shaft. The universal shaft connects to a short rigid shaft 2 feet 6 inches long mounted on the front of the trailer frame. A Velos V-belt transmits power from the shaft to a pulley on the end of a crankshaft. (A Velos belt can be used without a tightener, because links can be removed from or added to it.) The crankshaft and piston rod used to oscillate the sifter were salvaged from a one-cylinder gasoline engine.

The speed of the sifter in relation to that of the power take-off can be regulated by the size of the pulleys used. At this nursery, a 4-inch pulley on the sifter shaft and an 8-inch pulley on the crankshaft is satisfactory.

See also the manually operated sand spreader shown in Figures 25 and 26 and the truck type shown in Figures 32 and 33.

FIGURE 30. – *Two views of drive mechanism for sand spreader.*

Courtesy, Forestry Department, Michigan State University

Seedbed covering with cloth or mulch

In many areas, beds are covered to protect seed from birds and from displacement by rain, and particularly to keep seed and soil continuously moist. The latter is true, even though a sprinkler system exists to supply water. The covering must let water and presumably some light reach the seed. It must be nontoxic, inexpensive, quick and easy to apply, and, if need be, easy to remove. A cover that does not meet these specifications may seriously reduce or completely destroy the seedling stand.

Examples of materials used for this purpose are burlap or other coarse cloth; pine needles, commonly called "pine straw"; or wood chips. Both cloth and pine straw have proved superior to grain straw, paper, sawdust, soil, and sand at some nurseries, but not at all.

Pine straw usually requires more labor than cloth to apply and remove, gives less protection against birds, floats away if rain floods the beds, and is a potential source of needle infection. However, it requires no wire pins, prevents rain packing the soil, and can be obtained in quantity by nurseries within forest areas. Seedlings of all species come up through a properly applied layer of pine straw. If too thin or too thick a layer is applied, the thickness can be adjusted even while germination is taking place. Seedlings are less seriously flattened and less rapidly smothered by pine straw than by cloth. Therefore, removal of pine straw need not be timed as precisely as the removal of a cloth—a feature especially advantageous with seed that germinate slowly and irregularly. In nurseries subject to excessive heat, drought, or wind erosion, part of the straw may be left in place all summer as a mulch. This practice has materially improved the quality of nursery stock in some instances.

Pine straw can be scattered evenly over the beds by hand or with forks, but at large nurseries a commer-

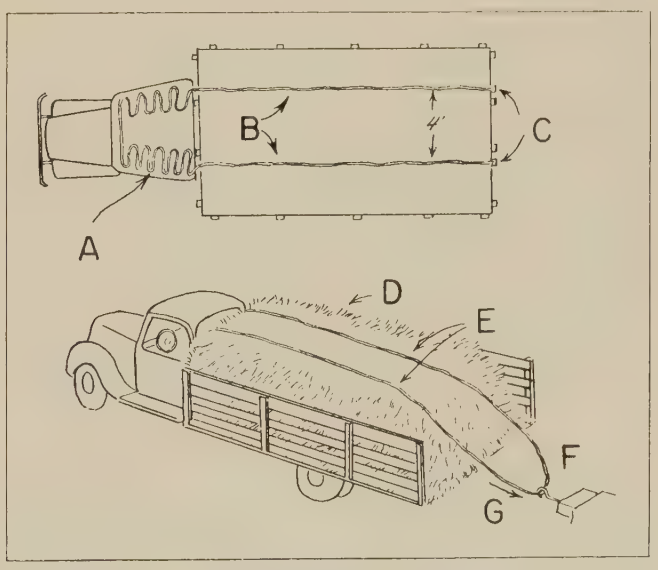

FIGURE 31. – *A method for unloading pine straw mulch from vehicle.*

Courtesy, Forest Service, U.S.D.A.

A. *Rope placement while loading*
B. *Rope laid out on empty truck bed*
C. *Attach rope to stake socket*
D. *Pine straw*
E. *Rope*
F. *Tractor*
G. *Pull*

FIGURE 32. – *Self-unloading truck spreading sawdust.*
Courtesy, Georgia Forestry Commission

FIGURE 33. – A. *Agitator mechanism on self-unloading truck.* B, C. *Side view of drive mechanism and a closeup.*
Courtesy, Georgia Forestry Commission

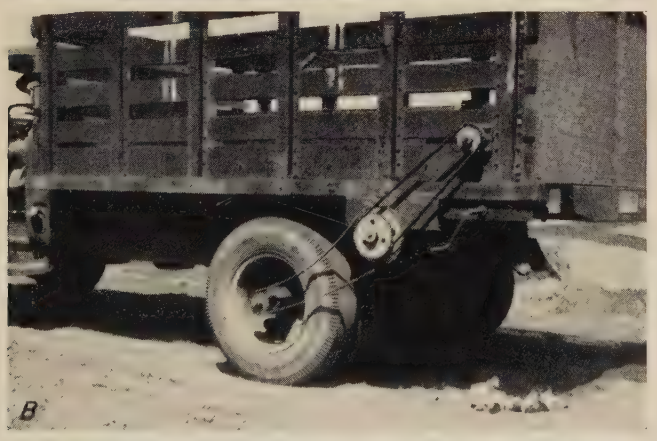

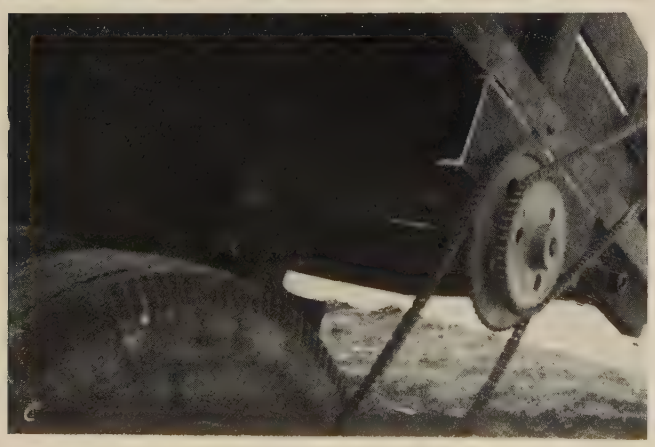

cially available manure spreader modified to prevent sidewise scattering is best. The correct depth is ½ to 1 inch before settling and less than ½ inch after settling—just enough to conceal the seed. The pine straw required for a 4- by 400-foot bed is between 2½ and 5 cubic yards. An acre of 4-foot beds with 2-foot paths requires 45 to 90 cubic yards of straw. The fewer twigs and cones the pine straw contains, the easier it is to spread. Storing the straw in piles for a year before use rots it somewhat and facilitates uniform distribution with a manure spreader. A simple method of unloading the straw or other mulch is shown in Figure 31.

Some nurseries use sawdust, wood chips, or similar small flaky organic matter as a mulch and also as a soil amendment to help maintain fertility. It is most laborious to distribute this material uniformly if it must be shovelled directly from the truck or spread from piles in which it has been dumped. Equipment to be attached to the tail gate of a dump truck has been developed by the Georgia Forestry Commission and has performed satisfactorily at its nurseries (Figures 32 and 33).

If this device is to be used to spread mulch directly onto the surface of seedbeds, a horizontal screen cylinder rotating beneath the falling material should be added. The cylinder should be as long as the width of the truck body and about 10 inches in diameter. It should be made of ¼- to ½-inch mesh hardware cloth on a horizontal axle supported by brackets fastened to the truck's frame. An additional gear and chain added to the drive mechanism on the wheel (Figure 33) causes the cylinder to rotate as the mulch falls over and through it. This results in a reasonably smooth, even distribution of the mulch.

Cloth covers can be laid and removed more quickly than pine straw. During germination, they give better protection against birds and flooding rains. Their chief disadvantages are high initial cost of cloth and pins, the necessity of timing their removal exactly, the tendency of certain soils to pack hard under cloth, and deterioration of the cloth. Also, the seedlings are especially susceptible to damage by hail and heavy rain during the first 2 or 3 weeks after the cloth is removed.

The two favorite cloth covers are jute burlap and Osnaburg or similar rather porous cotton cloth. Burlap weighing 9 or 10 ounces per square yard is preferred; 12-ounce burlap is a little too thick and unnecessarily expensive, while 7- or 8-ounce burlap is a trifle light, especially after a season's use. Nine-ounce burlap with 11 to 13 threads per inch of warp and 10 to 12 per inch of filling is preferred. New burlap may be purchased in 100-yard rolls, in any desired width. For 48-inch beds, the 54-inch width should be obtained. Second-hand bags stiched together into strips are sometimes available at less cost, but they have the disadvantages of variations in weight and durability, seams that hinder laying and disturb the seed when the cover is removed, and frequently holes that expose the seed.

Cloth covers may be laid by land or by mechanical layers pulled behind the seeder. At some nurseries, a reel is mounted on top of the seeding machine in such a manner that the cloth unrolls from the reel and passes under the seeder's roller as the work progresses. Thus, the cloth is immediately pressed into place on top of the seed. This makes it possible to sow even when the beds are so moist that soil and seed would otherwise stick on the roller.

After laying, the cloth must be stretched and fastened down with pins stuck through the edges and into the ground. Such pins are usually made of a stiff galvanized wire and have a loop bent into one end. To facilitate handling, the loop should be of a diameter somewhat larger than a workman's finger. Placed at 3-foot intervals to keep the wind from flapping the cloth and injuring the seedlings, such pins for a 4- by 400-foot bed require about 350 feet of wire. Pins for an acre of 4-foot beds with 2-foot paths require about 6,000 feet of wire.

Seeding, burlap placing and pinning can be done as a combined operation by two men working from a low trailer pulled behind the machine. On large-scale operations, the cost of making such equipment is well justified. Such equipment is not commercially available — it must be made in local shops. The design shown in Figure 34 has proved satisfactory.

Cloth covers must be removed before an appreciable percentage of the first seedlings have been smothered or have worked their way through the fabric, but not until most of the seed have germinated. A rough practical rule is to take off cloth covers when seedbed germination equals two-thirds to three-fourths of laboratory germination. Great care, as well as correct timing of removal, is necessary to avoid destruction of seedlings just taking root. Failure to clean and store cloth covers properly may necessitate buying a complete new supply each year. The cloth should be cleaned by washing — laying it on the grass in the rain is common practice — or beating, and it must then be thoroughly dried. Storage of damp cloth can lead to fire from spontaneous combustion. A tractor-powered device to facilitate brushing and rolling the burlap after drying is shown in Figure 35.

Untreated cloth has a short life — perhaps not more than a single season. Cloth treated to resist deterioration is commercially available, or such treatment can be given at the nursery by impregnating it with a solution of certain copper salts. A formula found satisfactory at many nurseries is as follows:

	Pounds	*Percent by weight*
8.0 percent copper naphthenate solution	9.7	8.3
Alkyd resin, clear, or its equivalent	15.4	13.3
Mineral spirits (white spirits of petroleum)	31.6 (5 gal.)	27.1
Chrome green (Cr_2O_3) - dry powder form rather than ground in oil	1.5	1.3
Water	58.0 (6.95 gal.)	50.0
TOTAL	116.2	100.0

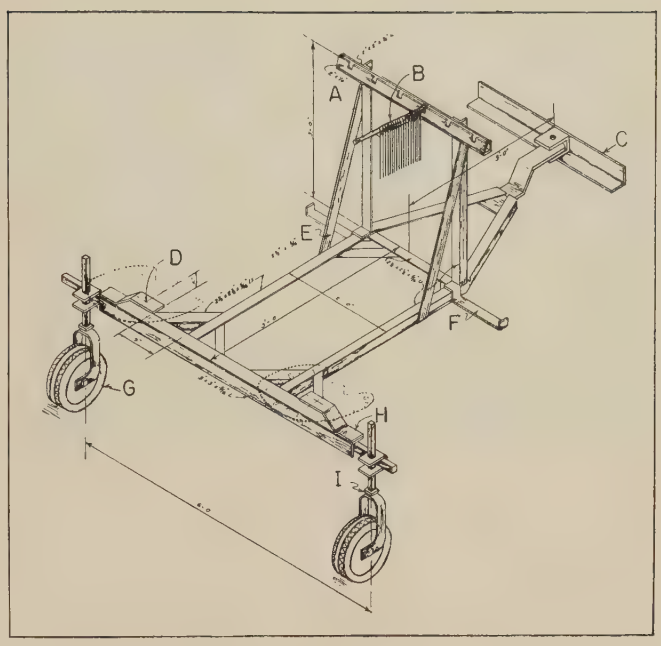

FIGURE 34. – *The burlap pinner trailer. All connections are welded.*

Courtesy, Forest Service, U.S.D.A.

A. *2 1/4 in. strap iron*
B. *Pin sticks, 3/4 in. pipe, 1 in. flat washer, welded to bottom to support stick in position - length 18 in.*
C. *Burlap layer frame*
D. *Seat bolted to seat support*
E. *2 1/2 × 5/16 in. brace*
F. *Foot support*
G. *Pneumatic tire (wheelbarrow type)*
H. *Spring steel*
I. *Swivel*

The 8.0 percent copper naphthenate solution is commercially available. Solutions of other strengths are on the market. The formula above applies only to the 8.0 percent solution; if a weaker solution is used, the amount of solution must be increased and the amount of water must be decreased to give the same amount of metallic copper. Chrome green may be obtained from paint companies. It is much easier to formulate in powdered form than when ground in oil; the quantity given in the formula is for the powdered form.

The above formula is recommended because both straight copper napthenate and burlap are light-sensitive. Addition of chrome green as a pigment prevents appreciable loss of metallic copper and also deterioration of burlap fiber. The alkyd resin serves both as an emulsifier and as a binder to keep the pigment in the fiber.

To prepare the solution, first dissolve the 8.0 percent copper napthenate in the mineral spirits. This is most easily done by setting the container of spirits in hot water (130° F.), but is possible even at a lower temperature if time enough is allowed and the mixture is stirred with a paddle. CAUTION: *Do not use an open flame for this purpose.*

Next, when the copper naphthenate has been completely dissolved, add the alkyd resin and mix thoroughly

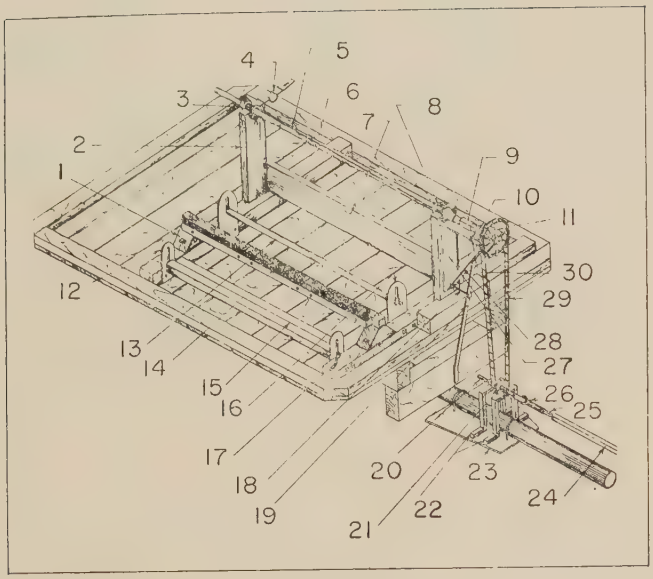

FIGURE 35. – *Power-driven burlap roller.*

Courtesy, Forest Service, U.S.D.A.

1. *4 × 4 in. support for brush, 9 in. base, 2 in. top*
2. *Wood roller support (2 × 6 × 28 1/2 in.) fitted into top of support*
3. *2-in. pipe with collar on inside end, large end of half of split roller bolted to pipe: outside end is reduced to a 1-in. pipe 6 in. long to form a handle*
4. *Upper bearing half-hinged to permit removal of roller*
5. *Roller - hardwood 56 in. long, 3/4 in. diam. split on diagonal for ease in removal from completed burlap roll*
6. *Frame, 4 × 4 × 60 in.*
7. *Brace, 1 1/2 × 7 in.*
8. *2-in. pipe with collar on inside end: large end of second half of split roller is bolted to pipe, a 2- to 1-in. reducer is fastened to outside end of pipe with 1-in. square shaft 3 1/2 in. long welded into the 1-in. end of reducer*
9. *Hollow shaft 1 1/2-in. square, 3 in. long, for detachable connector between roller and sprocket shaft*
10. *Pillow block bearing, 4 in. long for 3/4 in. shaft*
11. *Sprocket, cast iron, 9 in. diam., 26 teeth fastened to 3/4 in. shaft*
12. *Slotted support for brush, 1/8 × 4 × 10 in. with 3/8-in. slot*
13. *Roller, 1 1/4 in. pipe, 55 in. long running on 3/4 in. pipe shaft, 58 in. long*
14. *Brush, 59 in. long, bristles up*
15. *Brush, 53 in. long, bristles down*
16. *Slotted support for roller (1/8 × 6 × 13 in.) with 15/16-in. slot*
17. *Spring, 3 in. diam., 8 1/2 in. long, to provide tension to brush*
18. *Brace 1/2 in. bolt 5 1/8 in. long*
19. *Brace, flat iron (3/8 × 1 1/2 × 36 in.) welded at top, bolted to trailer frame at bottom*
20. *Steel shaft, 3/4 in. diam. with 1-in. pipe, 3 in. long, for bearing fastened to brackets by U-bolts of 1/4-in. diam.*
21. *Sprocket steel, 3 in. diam. 11 teeth, fastened to 3/4-in. sprocket*
22. *Steel brackets to support bearing for shaft*
23. *1/4-in. steel plate fastened to trailer tongue by 2 U-bolts of 5/8 in. diam.*
24. *Drive shaft, 1 in. hollow square, female*
25. *Drive shaft, 15/16 in. square, male*
26. *Universal joint*
27. *Flat iron bracket (1/2 × 4 in.) bent at right angle to support shaft bearing*
28. *Brace, T-iron 3/8 × 1 1/2 in. welded at both ends*
29. *Chain, detachable sprocket, 82 links.*
30. *Wood block (3 1/4 × 4 × 1 in.)*

by constant high-speed agitation. Such mixing can be accomplished in the tank of a power sprayer, which has an agitator. Temperature may be disregarded. Third, add the specified amount of water, still maintaining constant high-speed agitation. Lastly, add the pigment, *gradually*, still maintaining constant high-speed agitation.

A 0.5 percent copper content, by weight, is desired in the treated burlap. This is obtained by thoroughly wetting the burlap with the prepared solution, then passing the treated cloth flat between two rollers to remove the surplus. For combined effectiveness and economy, the take-up after wetting and wringing should be 75 percent of the *dry* weight of burlap. The burlap must then be dried thoroughly before storage or use. It should be flat during drying to prevent movement of solution within the cloth with resultant unevenness and ineffectiveness of treatment.

Treated burlap should be weathered for 3 months or more before using it on seedbeds, because germination under freshly treated burlap is 10 to 30 percent lower than under untreated burlap. The newly treated burlap may be given the requisite weathering by exposing it to sunlight and rain, but not in contact with the ground. However, second-year trials with weathered burlap indicate no adverse effects resulting from the copper naphthenate treatment. This treatment has cost about 5 cents a yard at some nurseries. Treated burlap lasts five to ten times as long as untreated.

Polyethylene covers

Covering the seedbeds with polyethylene sheets creates a greenhouse effect that is desirable for certain species. For example, the problem of long-delayed and erratic germination of *Juniperus* seed at Oklahoma State nurseries was solved by the use of such sheets. The technique was as follows:

Clean, dry, untreated juniper seed was sown in early fall on conventional seedbeds. A light covering 1/8- to 1/4-inch thick of sawdust was then spread over the seedbed, after which it was thoroughly watered and then covered with a polyethylene sheet. The polyethylene used was clear, 53 inches wide to cover adequately a 48-inch bed, and 2 millimeters in thickness, weighing 1 pound per 100 square feet. Burlap was laid over the polyethylene to help hold it in place against wind damage. No irrigation was needed while the polyethylene was in place, because it condensed water vapor that would otherwise have been lost, and returned it to the soil. The covering was removed when germination was nearly completed on March 15.

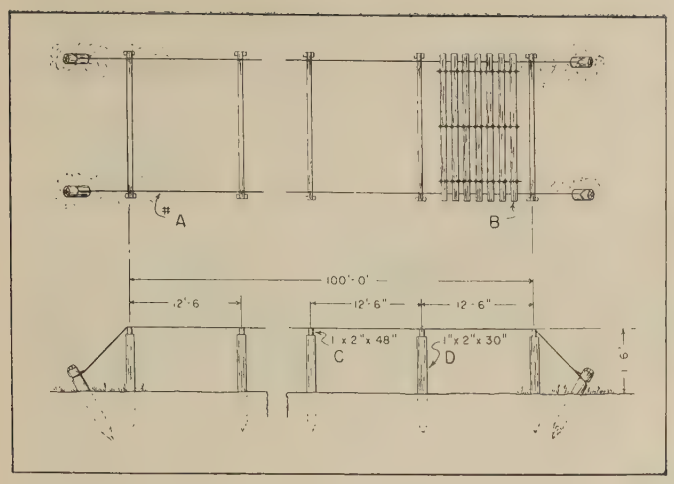

FIGURE 36. – *Roll-type snow fence to shade seedbeds.*

Courtesy, Forest Service, U.S.D.A.

A. *9-gage galvanized iron wire*
B. *Rolled lath space*
C. *Crossbars (1 × 2 × 48 in.)*
D. *Stakes*

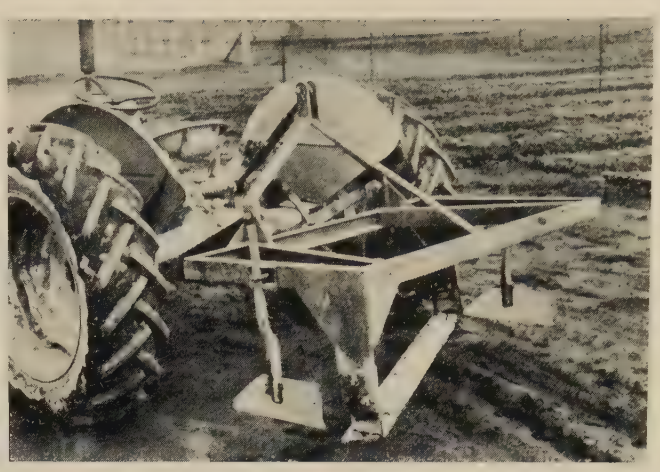

FIGURE 37. – *Nisqually oblique blade root pruner.*

Courtesy, Industrial Forestry Association

FIGURE 38. – *Rear and side view of a vertical root pruner at work.*

Courtesy, Forest Service, U.S.D.A.

SHADE

Some species in some localities benefit if partially shaded during certain stages of their development. Experimentation is needed to establish the desirability of this practice at any specific nursery.

Wooden slats nailed to light frames of a size convenient for two men to handle are frequently used for this purpose, but an easier method is to use slat-wire snow fence supported by two or three parallel wires running the length of the bed. The wires are held at the desired distance above the surface by vertical stakes of wood or iron (Figure 36).

There is now also commercially available a material woven of coarse plastic threads in various patterns of stripes or checks to yield a predetermined degree of shading. Such material has many advantages, such as ease of handling, less weight, and less bulk in storage over the slat type of shade in rolls or rigid panels.

Such shade is an obstruction and must be removed when it is time to weed and spray the beds. Its placement, and handling during the season is an annual expense additional to its original purchase price. It is, therefore, desirable to avoid its use unless the advantages outweight the extra costs involved.

ROOT AND TOP PRUNING

Under favorable circumstances, the root pruning of conifer seedlings in the beds may cause them to develop into a better balanced plant with a more fibrous, compact root system and a smaller top. In some cases, the improvement is sufficient to eliminate the need for transplanting. The best results in such cases have come from root pruning at a depth of 3 to 5 inches in the spring of the second year.

Several of the lifters used as an aid in digging trees will serve also as horizontal root pruners. The nursery of the Industrial Forestry Association at Nisqually,

FIGURE 39. – *Top pruning.*

Courtesy, Forest Service, U.S.D.A.

Washington, developed a special pruner with an oblique blade that is even better for this purpose than a lifter is (Figure 37).

Immediately after root pruning, the beds should be watered thoroughly to make the soil settle back into place and reduce wilting of the trees. Root-pruned conifer stock may suffer from a nutritional deficiency, because of the loss of a 50 percent more or less of its root system. Application of a complete liquid fertilizer, totaling about 300 pounds per acre of 15-30-15 fertilizer or its approximate equivalent, within a week or two of root pruning will aid in maintaining normal, healthy foliage color and obtaining improved field survival.

Vertical pruning is also desirable in many cases (Figure 38). It should especially be performed along the edges of each bed, because the trees there tend to develop rather wide-spreading lateral roots extending into the paths.

For stock grown in drills, vertical pruning can best be done with sharp, rolling colters mounted on an axle and located at midpoint between rows. The rolling colter is less likely to clog with refuse and tree roots than vertical individual knives, even when these are slanted downward and backward.

Top pruning to eliminate unwanted top growth is also successfully practiced in some places (Figure 39). A common hay mower will serve this purpose.

The diagrams for this article have been reproduced in as much detail as practicable but cannot be definitive. Readers requiring working drawings should refer to the author. The manual will be concluded in the next number of Unasylva *and afterwards will be available as one reprint.*

NOTE: 1 inch = 2.54 centimeters; 1 foot = 30.48 centimeters; 1 square foot = 0.0929 square meter; 1 acre = 0.4 hectare; 1 gallon = 4.54 liters; 1 pound = 0.45 kilogram.

The Work of FAO

Tenth Session of FAO Conference

Every session of the full Conference of FAO, the supreme governing body of the Organization, creates its own particular atmosphere. At the Tenth Session, which was held in Rome from 31 October to 20 November 1959, the characteristic seemed to be tenacity although, unlike previous sessions, there were no overt wrangles over the level of the Organization's budget for the next financial period, 1960-61.

A feature of the session was the frequent spotlighting of the importance of forestry in the world economy, with strong interventions by many forestry protagonists and notably by Professor Eino Saari, leader of the delegation of Finland.

As usual, the Conference had a very full agenda and dissolved itself into various Commissions and Committees so as to cope with its work in the time available. It is possible here to quote only some of the conclusions and decisions appearing in the final report.

As regards FAO's work in the field of forestry and forest products, the Conference commended the Director-General on the scope and intrinsic value of the program fulfilled through 1958 and 1959 and of the projects he proposed to undertake during the ensuing biennium, which were generally approved. The hope was expressed that the Director-General would ensure that future allocations are commensurate with FAO's increasing responsibilities in these fields, taking into account the over-all needs of the Organization.

In regard to 1958 and 1959, the Conference singled out for special mention the completion of the study on wood resources and requirements for the Asia and Pacific region and of the third World Forest Inventory (1958); progress in the compilation of a multilingual forest terminology; the co-operation of the International Labour Organisation in the work of the Joint FAO/ECE Committee on Forest Working Techniques and Training of Forest Workers; the joint meetings on forestry/agriculture relationships held in Turkey in 1959 by subsidiary bodies of the European Forestry Commission and of the European Commission on Agriculture; and the technical aid rendered under the Expanded Technical Assistance Program (ETAP) to many developing countries.

Appreciation was expressed to the Government of the United Arab Republic for the buildings and facilities provided for the Near East Forest Rangers' School. Governments of the Latin-American Region were again urged to give support to the Latin-American Forest Research and Training Institute at Mérida, Venezuela. A draft agreement for the permanent operation of the Institute was approved, for subsequent submission to the governments concerned for ratification.

Program of Work 1960/61

Inevitably, with the limited resources available the Director-General had to be selective in the projects to be undertaken under the Regular Program in the ensuing biennium. The selection had to be made against the background that forests everywhere have a vital protective function to fulfill, and that furthermore the world was likely to require an increase in output in the order of 500 million cubic meters of industrial wood over the next 15 to 20 years. Both these points presented marked difficulties in the less developed regions of the world, which justified the importance attached by the Director-General to extending and improving forest and watershed management and to encouraging forest industry development in these regions.

The Conference agreed with the policy of giving increasing emphasis to the servicing of ETAP activities in forestry and forest products.

The Conference was in agreement with the sectors selected by the Director-General for special emphasis in 1960/61, which included:

(*a*) land-use problems, including forestry problems connected with land settlement and colonization;

(*b*) evaluation of the indirect benefits of forests (forest influences);

(*c*) forest operations and working techniques;

(*d*) research, with the International Union of Forest Research Organizations acting as scientific adviser to FAO;

(*e*) forestry education, in its widest sense, including promoting fellowships, foreign travel of technicians and organizing demonstration projects;

(*f*) surveys of timber resources and requirements;

(*g*) investigations on the yields from investments in forestry and on other key economic problems.

The emphasis given to the regional co-ordination of plans for forest and forest industries development received favorable comment. The Conference drew the attention of the Director-General to a recommendation made by some delegates that a working party be formed to study the economic and technical aspects of production and trade of railway sleepers (crossties) in the southern zone of Latin America.

Freedom-from-Hunger Campaign

The Conference noted especially the many ways in which forestry could contribute necessary elements in the Director-General's Freedom-from-Hunger Campaign. The improvement of forest range management, improved rural and urban housing, packaging for the mass distri-

bution of foodstuffs, provision of fuelwood, and the contribution of farm woodlands to farm incomes, were cases in point. Water is a key element in food production and the sound management of forests or watersheds (catchment areas) is needed to ensure the sustained availability of water.

The proposal for a Freedom-from-Hunger Campaign, conceived by the Director-General and endorsed by the Economic and Social Council (ECOSOC) at its summer session in 1959, is fundamentally designed " to promote a climate of opinion throughout the world in which the problems of hunger and want would be faced realistically, their causes analyzed with detachment, and their remedies sought in a bold and courageous manner ". It was based essentially on an intensification of efforts in FAO's fields of work, and contemplated informational and educational activities, along with research work and national action programs.

General items

Many delegates stressed the value of organizing more study tours as a means of forestry training. Such tours should normally form an integral part of technical meetings but on occasion it might be more appropriate to organize them separately.

The Conference took note of the offer of Argentina to make available to interested member countries the facilities of the new national forestry school. It was hoped that these facilities could be expanded so as to provide specialized training in torrent control and soil conservation, as recommended by a recent ETAP mission, and that international aid would be forthcoming for this purpose. The Conference also noted with appreciation the offer of Austria to place the resources of its new high-altitude acclimatization research institute at Patscherkofel, Tyrol, at the disposal of interested countries, as a gesture of bilateral technical assistance.

The proposals of the Director-General to organize a Second World Eucalyptus Conference and a worldwide consultation on problems of the production, use and trade of plywood, were endorsed.

The Conference heard with great appreciation a report by the delegate of the United States of America on the progress being made in preparing for the Fifth World Forestry Congress. It also welcomed the arrangements being made in Canada for study tours and other activities, as reported by the delegate of that country. Member countries were urged, in the spirit of Resolution No. 21/57 of the Conference's Ninth Session, to give every support to this important forestry event, especially by facilitating broad participation by national and nongovernmental services, institutes and agencies, by representatives of industry, and by individuals.

The Conference urged Member Governments to concentrate increasingly on improving national statistical services concerned with forestry and forest products, and on securing accurate national forest inventories, aided by FAO to the extent possible with the funds available. It was emphasized that every problem related to the development of forestry and forest industries has an economic aspect. The Conference stressed that accurate statistics are fundamental to activities in all fields of forestry and to the formulation of forest policies. The Director-General was commended for the quality and usefulness of the statistical and economic information on forestry and forest products assembled and issued by the Organization. Foresters attending the Conference, after being advised of the conclusions of the Program Committee about future arrangements for statistical work within the Organization, wished to place on record their considered opinion that, except for tabulation and mechanical calculation for routine publications, such as the *Yearbook of Forest Products Statistics*, any separation of the planning, compilation and analysis of statistics from the other activities of the Forestry and Forest Products Division would result in a loss of quality and efficiency.

Regional Forestry Commissions

The Conference took note of the reports of the Tenth Session of the European Forestry Commission, the Second Session of the Near East Forestry Commission, the Sixth Session of the Joint Subcommission on Mediterranean Forestry Problems (*Silva Mediterranea*), and of the Sixth Session of the Latin-American Forestry Commission. It commended the proposals and recommendations expressed in these reports to the close attention of the Director-General and of Member Governments.

Support was reaffirmed for the Director-General's policy of strengthening further FAO's regional activities in forestry and forest products. The Regional Forestry Commissions and their subsidiary bodies should play an increasingly important role in providing member countries with opportunities to discuss together, at a regional level, problems of mutual concern, as, for instance, the matter of the impact on forest policies of current trends towards economic integration among regional groups. The commissions could also serve to ensure that due weight is given by governments to forestry in land-use planning and that the role of forestry is kept in proper perspective in relation to all other forms of land-use.

The Conference was apprized of the completion, with FAO's help, of an economic study for forest development in Argentina, and took note of a proposal that such studies might be initiated by national agencies with the help of outside experts in other interested countries of Latin America or even of other regions, taking advantage of the experience gained in compiling the reports made in connection with FAO's Mediterranean Development Project.

The Conference particularly appreciated that Member Governments were now agreed to complete the pattern of regional forestry commissions so as to cover all the regions served by the Organization. As a result it approved the establishment of Regional Forestry

Commissions for Africa and for North America. The functions of the Forestry Commission will be to advise on the formulation of forest policy and to review and co-ordinate its implementation on the regional plane, to exchange information, and to advise on technical problems.

The Director-General was urged to convene a first session of the African Forestry Commission before the next session of FAO's Conference in 1961. Arrangements would be made in consultation with Member Governments concerned and with the Commission for Technical Co-operation in Africa South of the Sahara (CCTA).

For the North American Commission, a first session would be held at a time and place to be determined by the Governments of Canada, Mexico, and the United States of America.

Program Trends

The Conference decided to expand FAO's responsibilities by including wildlife management among its regular activities, as proposed initially by the European Forestry Commission. It recommended that the Organization should develop a practical program of work in this field, and asked the Director-General to consult with Member Governments, with the International Union for the Conservation of Nature and Natural Resources and with the International Hunting Council, with a view to presenting specific proposals to its Eleventh Session.

The Conference endorsed the Director-General's intention of seeking to expand considerably FAO's work aimed at strengthening in member countries the organizational and administrative structure for planning and servicing forest development and for conducting research, extension and education. It particularly agreed that increased attention should be given to research and training, including that at the post graduate level. The view was expressed that regional co-ordination of research and training was essential for the achievement of FAO's objectives, and that regional advisory groups for this purpose should be maintained or established by the Organization for all the less developed regions to the extent that funds permit.

Work on logging and extraction, forest resource surveys, and on the economic aspects of forest policies, should also be considered for expansion. The phased cycle of studies on regional wood resources and requirements should be brought to completion as planned.

The Conference further invited the Director-General to strengthen the collaboration between the Forestry and Forest Products Division and the Land and Water Development Division on studies related to the sound management and conservation of natural resources (water, forests and soils). Such sound management and conservation should constitute an integral part of country planning, land-use policies, and economic and social development programs.

The Conference also requested the Director-General to give consideration to expanding the activities of the Organization in the field of forest tree improvement, with special emphasis on the extension of quick-growing species of economic value in temperate, arid and tropical countries.

Pulp and paper development

Unanimous appreciation was expressed of the attention being given by the Director-General to pulp and paper matters, as evidenced by the activities of the Latin-American Advisory Group, direct assistance to Member Governments, and the Conference on Pulp and Paper Development in Asia and the Far East which, in collaboration with the United Nations Economic Commission for Asia and the Far East, is to be held in Tokyo in 1960. In the light of the report of the World Consultation on Pulp and Paper Demand, Supply and Trade, held in Rome in September 1959, the Conference considered that greater attention to pulp and paper problems should be given at the international level than they had hitherto received. It expressed the hope that the Director-General, in developing his future programs, would be able to make provision for expanding FAO activities in pulp and paper sufficiently to enable the Organization to give effect to the recommendations of the Consultation, and recommended that he should establish a group of experts to advise him on FAO's work in this field and that, in order to ensure effective guidance, the group should reflect broadly the interests of producer and consumer countries and be representative of the several regions.

Land-use policies

The Conference fully recognized the importance as well as the complexity of the problems involved in seeking to achieve better co-ordination between forestry and agricultural activities as regards land-use policies.

Unquestionably, many land-use problems cannot be adequately solved unless there is a common approach to them by agriculturists and foresters. Examples of such problems are those arising out of land-use planning, soil conservation practices, watershed management, land settlement, landscape planning, and the readjustment in the way of life of farmers in regions where afforestation or soil conservation measures have to be carried out in the overriding interests of society as a whole. Special mention was made of the importance of the problem of shifting cultivation in the tropical regions. It was noted that need for co-operation between foresters and agriculturists was being still more keenly felt since new forms of land use, involving simultaneous tree planting and agricultural cropping on the same land were assuming increasing importance.

The Conference felt that the progress made in promoting such co-operation had been somewhat slow throughout the world, with the exception of a very few countries. It was recognized that one of the main reasons for this had been the lack of adequate liaison in the

training of foresters and agriculturists and that another contributing factor in many cases had been the lack of suitable arrangements in the national administration.

The Conference considered, however, that co-operation between foresters and agriculturists involved not merely a problem of administration or education but also a problem of team work on specific technical questions. In this respect, there were cases where more technical knowledge would be required to facilitate such co-operation, e.g., the determination of the rate of afforestation in the light of local circumstances of particular watersheds or of the problems peculiar to each watershed.

With these considerations in mind, the Conference approved of the initiative taken by the Director-General to promote closer co-ordination of agricultural and forestry activities in the field of land use, of which the Mediterranean Development Project was a good example. This project constituted a co-ordinated approach to land-use problems with a view to concrete achievements.

The Conference felt that the initiative taken at the international level would be of great help to the member countries in achieving such co-ordination at the national level. Of special importance in this respect was the joint study tour organized by FAO in Turkey for members of the committees and working parties of the European Forestry Commission (EFC) and the European Commission on Agriculture (ECA) interested in land and water use problems. The discussions between foresters and agriculturists on that occasion had paved the way for the agreement reached between EFC and ECA, whereby the officers of the EFC and the Executive Committee of the ECA would constitute a standing committee to follow land-use policies relating to joint agricultural and forestry activities and to make sure that from an economic and social point of view such policies were consistent with the achievement of the objectives of a general development policy.

The Conference realized the importance of extending this sort of procedure to, or of devising a new one for, other regions where problems common to forestry and agriculture are no less important than they are in Europe. The Conference emphasized, however, that the possibility of establishing such co-operation in other regions required further study and that the results of such studies should be submitted for the consideration of the governments concerned at the earliest opportunity.

Watershed management

The Conference reviewed the work of FAO in the field of watershed management and paid special attention to the analysis of the conclusions drawn from the FAO Seminar and Study Tour on Watershed Management held in the United States from 10 August to 5 October 1959. The Conference underlined the following points:

(*a*) The growing awareness of the feasibility of managing watersheds. The technical possibilities for improving the quantity and quality of water and for controlling floods through combined programs of land treatment and engineering structures were now widely appreciated.

(*b*) The growing awareness of the physical unity of a watershed and of the area served by its waters. Water development should no longer be considered as an isolated technical operation; on the contrary, erosion control, reforestation, channel improvement, reservoir construction, and even groundwater development ought to be regarded as parts of an over-all water and watershed management activity.

(*c*) The relative lack of technical knowledge relating to watershed management. Clear and precise conclusions on certain issues were still lacking and there seemed to be a need for further technical research on watershed management.

(*d*) The unsatisfactory status of economic evaluations in respect of watershed development. There was still no well-defined methodology that could be used in guiding decisions as to the expenditure to be incurred in watershed development. It was agreed that any attempt to determine the cost-benefit relationship should take account of the social and economic conditions in each country.

(*e*) The need for enlisting the support and active participation of land users in the implementation of watershed management programs.

Mediterranean Development Project

The Director-General opened the discussion on this point of the agenda by referring to the history of the Mediterranean Development Project and the co-operation he had received from the United Nations and its sister agencies. He then outlined the integrated approach and the broad philosophy of development which was followed.

The Conference commended the approach to forestry problems as an essential element of balanced land-use and with due regard to the general economic and social development of the countries concerned, but expressed the view that the formulation of principles for a policy of land and water use might have been given greater prominence. It was further suggested that study of FAO's Mediterranean Development Project might be included in the curricula of all universities and other educational institutions concerned with land use of the region and that a land and water use faculty be established in the region. Stress was also laid on the need for all the countries concerned to consolidate and continue the work undertaken, and it was recommended that the Organization should play an important role in the initiation and co-ordination of the activities foreseen by the project.

Both Mediterranean and non-Mediterranean countries voiced approval of the project, which was described as a good example of constructive cooperation between governments. Representatives of the United Nations

Economic, Social and Cultural Organization (UNESCO) and the International Labour Organisation (ILO) stressed the interest of their agencies in the project and their readiness to co-operate in its follow-up. The Conference also heard from the Director of the Institute of Social Studies in the Hague of his intention to organize as a follow-up action academic conferences of social scientists to discuss some of the theoretical aspects of economic and social development in the Mediterranean area.

The breadth of the approach, the quality of the diagnosis of the situation and particularly the strong orientation of the project toward early and concrete action were favorably commented upon. The view was expressed that the country reports and the programs they advocated were likely to be of benefit also to other countries than those directly concerned.

There was urgent need in the region to reverse an age-old tradition of deforestation and soil erosion. Demographic pressure on land of limited productivity, especially in a semiarid climate, was likely to lead to a serious deterioration of the situation. To co-ordinate development of all sectors of the economy was a prerequisite for any rise in standards of living from their present low levels. Despite obvious differences in conditions between countries, there were many problems which were of concern to all, and this justified a regional approach. The analysis brought out several types of projects which might usefully be undertaken jointly by groups of countries.

Many delegates indicated that the objectives of the project were very much in line with the views of their own governments though, of course, each had to take due account of particular circumstances. Approval was given more specifically to the " propulsive sector " and regional spearhead approach, and to the importance of avoiding a dispersal of limited financial, administrative and technical resources.

Turkey announced its intention of setting up a development area in Antalya and Greece in the Aliakmon basin in Western Macedonia. Tunisia and Morocco were similarly considering the establishment of spearhead zones. In Yugoslavia, several projects had already been initiated and others were envisaged. Progress achieved in these spearhead zones could be expected to spread gradually to the rest of each country concerned; and the experience gained in each development zone would be valuable to the other countries.

Some delegates felt that greater attention might have been paid to the study of markets of particular commodities and to other more specific investigations. It was, however, the consensus of opinion that although a more thorough study could have been made if more time and money had been available, the need for urgent action forced the pace. Doubts were expressed about the usefulness of economic models and projections extending over 15 to 20 years but the majority felt that such quantitative estimates were useful for giving adequate perspective to development programs. Several delegates pointed out that the successful implementation of the programs depended on favorable foreign markets, and in this context, stressed the need for greater international co-operation in the marketing of exportable products.

It was generally recognized that the burden of economic development was great. The emphasis of the report on the need for extraordinary efforts by each of the countries concerned was accepted by all. It was considered necessary to secure an adequate administrative structure, well-trained manpower and heavy investment; otherwise, with the rapid growth of population, the countries would be exposed to the risk of severe setbacks in their standards of living. Such investment would have to include forestry, which should also be considered as a public works program designed to promote soil conservation especially in mountain areas and to absorb surplus rural populations.

Although most of the effort was to come from within the countries, external aid was nevertheless crucial. This could include the effective use of surpluses. To increase the effectiveness of foreign aid, it was considered necessary to have all bilateral and multilateral assistance carefully planned and co-ordinated. Several delegates expressed the readiness of their countries to extend technical or financial assistance for development programs in Mediterranean countries.

Technical Assistance

The Conference took the occasion of the Tenth Anniversary of the Expanded Technical Assistance Program to express once again strong support for the Program and to commend the Director-General for the work done under it. The Conference noted that as of September 1959, 1,773 FAO experts recruited from over 40 countries had served in the field; that some 1,600 fellowships had been awarded; that approximately 100 training centers had been organized; and that the number of countries and territories served by FAO had grown from 48 in 1953 to 68 in 1960.

In reaffirming its confidence in the value of the Expanded Technical Assistance Program, the Conference expressed some concern regarding the fact that the continuous and increasing support by participating countries had been more than offset by the rising costs of ETAP and the increase in the number of recipient countries. It therefore urged participating governments to increase their contributions wherever possible, so as to arrive at a situation whereby the gap between demands and resources would not continue to widen, as was the case for 1959 and 1960, but would rather decrease.

The Conference, recognizing that the Expanded Technical Assistance Program as a whole was based on decisions made by each recipient country individually, nevertheless expressed some concern over the modest decline in FAO's share. In this connection, recipient governments were urged to take full account of the primary role of food and agriculture in a developing national economy, in requesting assistance.

The Conference noted that the problem of recruitment and its procedures, including vacancy notices, would be studied at a forthcoming session of the FAO Council. Nevertheless it felt that it should call to the attention of governments, particularly those in countries which so far had provided many experts, the need to continue to facilitate the release of technical personnel for field assignments of the Organization.

The Conference reaffirmed its strong support for fellowships under the Expanded Technical Assistance Program, and emphasized the need for the training of middle-grade technicians. For this purpose the usefulness of regional training centers was commended. The decline in the number of fellowships requested was regretted, although it was appreciated that assistance for the training of personnel was also available through other programs. The Conference felt, however, that it was desirable for recipient governments to undertake a review of their over-all training needs and relate them to the facilities offered by all sources of external aid. This would promote coherent national training programs and their consequent improvement.

United Nations Special Fund

The Conference noted that the United Nations Special Fund, established in October 1958 by the United Nations General Assembly, would enlarge the scope of the programs of technical assistance of the United Nations and the Specialized Agencies and that, in accordance with the guiding principles and criteria for the operation of the Special Fund, its activities would be complementary to those of the Expanded Program of Technical Assistance.

The Special Fund began its activities in 1959, based on a total of contributions for that year of $ 26 million. The Conference was informed that of the first 13 projects which the Governing Council of the Special Fund had approved, five would be implemented by FAO, the Managing Director of the Fund having requested and the Director-General of FAO having agreed that the Organization would act as Executing Agency for them. It was further informed that among the 32 proposed projects which would receive consideration in December 1959, there were 12 for which the Organization would act as Executing Agency. Thus it appeared that FAO would be responsible for the execution of approximately one third of the total activities of the Special Fund during its first year of operation.

It was noted that FAO as Executing Agency would be held fully responsible for the efficiency and quality of implementation of Special Fund projects assigned to it. In this connection, the Conference was gratified to learn that the Director-General intended to subcontract certain projects or parts thereof to national institutes or private firms.

Committee on Forestry and Forest Products

To review the Organization's program in regard to forestry and forest products, a special Technical Committee was set up, for which the Conference nominated as Chairman, J. Jungo, Inspector-General of Forests, Switzerland. A joint meeting was also arranged between this Committee and the Agriculture Committee to deal with subjects of mutual interest. For this joint meeting J. de Vaissière, *Inspecteur générale des eaux et forêts*, France, was elected as Rapporteur.

The meetings of the Committee on Forestry and Forest Products were attended by 53 delegates, including foresters from 32 countries * and non-foresters from another six countries. A representative was present of FAO's sister agency, the International Labour Organisation, and also the President of the International Union of Forest Research Organizations and the Secretary-General of the International Union for the Conservation of Nature and Natural Resources. As Vice-Chairmen, the Committee elected E. Dabas, *Administrador General de Bosques*, Argentina, and K. Hamad, Assistant Director, Forestry Department, Sudan. Elected as Rapporteur was D.R. de Wet, Secretary for Forestry, Department of Forestry, Union of South Africa.

Staff Appointment

Sir Henry Beresford-Peirse, of the United Kingdom, has been appointed as Deputy Director of the Forestry and Forest Products Division of FAO.

Sir Henry, who has served as Deputy Director-General of the Forestry Commission of Great Britain since 1953, has been released by his Government for service in FAO for two years. Born in 1905, he was educated at Eton and at Magdalen College, Oxford. He served with the Forestry Commission in Scotland from 1929 until 1953, except for the period of the second world war, and was Director of Forestry for Scotland for the latter six years of that period. He was recalled from military service in 1940 to the Timber Supply Department of the Ministry of Supply, from which he returned to the Forestry Commission near the war's end.

Sir Henry was Chairman of the European Forestry Commission of FAO from 1955 to 1957, and Chairman of the Working Party on Afforestation and Reforestation from 1958 to 1960. He has been the United Kingdom forestry delegate to the FAO Conference for the last three sessions.

* Afghanistan, Argentina, Austria, Burma, Cambodia, Canada, Cuba, Federation of Malaya, Finland, France, Germany, Ghana, Greece, Honduras, Indonesia, Italy, Norway, Philippines, Poland, Portugal, Spain, Sudan, Sweden, Switzerland, Tunisia, Turkey, Union of South Africa, United Kingdom, United States of America, Venezuela, Viet-Nam, Yugoslavia.

OBITUARY NOTICE: ALDO PAVARI

With the death of Professor Aldo Pavari at Florence on 17 January 1960 after a brief illness, world forestry lost a greatly respected and much-loved leader. It is for others to say what he meant to Italy or to other countries where his authority brought him very high positions. Here we would like to recall his associations with FAO.

Born in Rome in 1888, Aldo Pavari took up forestry as a career in 1913 after teaching agriculture, and was to be the Director of the Florence Forest Research Institute without interruption from its inception in 1924 until his death.

Early in his career, however, he felt drawn to the larger international sphere. As far back as 1922, he represented Italy at the meeting at Marseilles which saw the creation of a Mediterranean Forestry Association, *Silva Mediterranea*, born of an idea of Hickel's first introduced at Madrid in 1911 on the occasion of the Ninth International Agricultural Congress. He became one of the moving spirits behind *Silva Mediterranea* and was its Vice-President, as well as chief editor of its review.

Once international activities were resumed after the last war, Professor Pavari was elected Chairman of the FAO Subcommission on Mediterranean Forestry Problems, which later assumed also the title *Silva Mediterranea* to emphasize the continuity with the earlier body. Successive re-elections kept him in office until 1958 when, at the Sixth Session of the Subcommission, he was appointed Chairman *honoris causa* alongside Professor Guinier.

Throughout this period he became known as a Chairman who presided over discussions with the utmost authority. He helped to initiate FAO's Mediterranean Development Project, and clearly diagnosed many of the problems of the region and suggested realistic solutions.

During this period, too, he was elected President of the International Union of Forest Research Organizations, the oldest forestry body that exists. Under his presidency, the closest and most cordial co-operation was established between the Union and FAO.

At Cadore, Northern Italy, Professor Aldo Pavari expounds to delegates his views on thinning methods during a study tour of FAO's European Forestry Commission.

Lastly, he represented his country actively on the European Forestry Commission of FAO, the International Poplar Commission and the International Chestnut Commission. He brought to the meetings of these bodies all his long experience and judgment, and the memory of the man and what he stood for will remain ever fresh in the hearts of all his colleagues.

In all these activities he was the doughty champion of a bold and forward-looking policy in forestry, continually emphasizing the need for new techniques and for new investments. Today his views have received confirmation in many quarters.

But this portrait of Aldo Pavari would be incomplete if one did not evoke also the great humanist. A man of wide culture, he had a profound understanding of human problems which endeared him to all who came in contact with him. He could speak movingly to inspire his listeners with his own deep feelings.

We are indeed sad at his passing.

Equipment Section

"Santilli" Annular Saw. — 40 cm. annular saw suitable for felling trees and bucking logs up to 60 cm. diam. Special carburetor permits use in all positions. Working parts water- and air-tight, do not need lubrification. Annular blades made in several sizes, ranging from 30 cm. to 1 m. *Specifications*: 4.5 hp, engine running on a 4 percent mixture; tank holds enough fuel to last about an hour; weight of saw: 19 kg.

Manufacturer: S.A.S. – Seghe Anulari Santilli, Via Bonzo 7, Turin, Italy.

Crosscut Saw Machine. — Machine developed for sawing to length, and squaring blank ends suitable for automatic lathes etc. Output depends on number of saws mounted on spindle; photo shows 20 in. (51 cm.) machine arranged for sawing three 6 in. (15 cm.) lengths per stroke at rate of 20 strokes per min., i.e., 60 blanks per min. Inclined table facilitates convenient feeding; operator shielded by heavy gauge overplate which covers saws and pressure fingers. In operation table advances carrying work up through saws. These are easily adjusted for length of work, being mounted in independently adjustable collars. Min. adjustment approx. 2 in. (5 cm.).

Manufacturer: Tyson's Woodworking Engineers, Greenodd, Ulverston, Lancs, England.

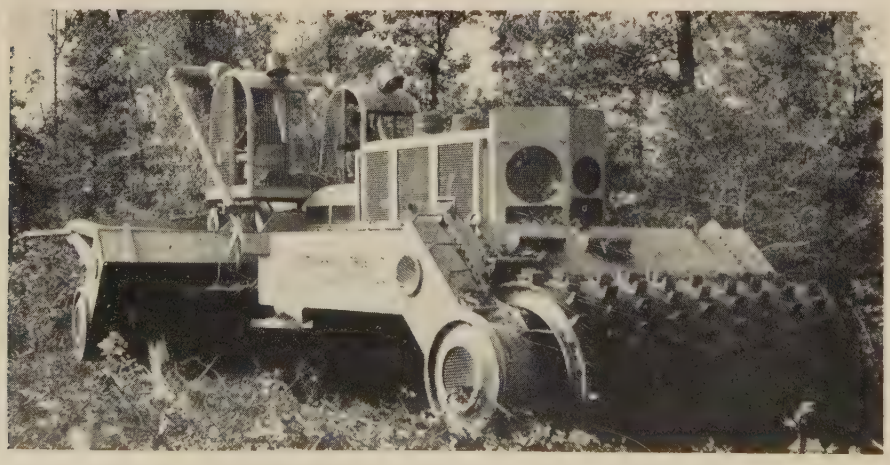

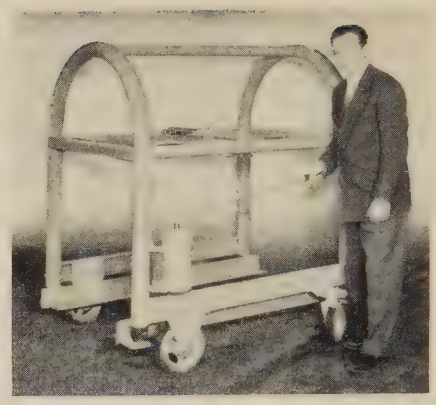

"Abeille" Truck. — Load raised by lateral "lifting bars", operated by hydraulic device. Truck takes load, suspended between uprights, lengthwise. Load put on two bolsters or crossbeams raised off ground by two clamps to allow lifting bars to pass underneath. To set down load, decompression of hydraulic device lowers bars. Capacity rating: work load – max. 1,200 kg.; size of load: max. width 80 cm., max. height 80 cm. for all lengths.

Manufacturer: P. Cortot, Avenue Duquesne, Paris 7e, France.

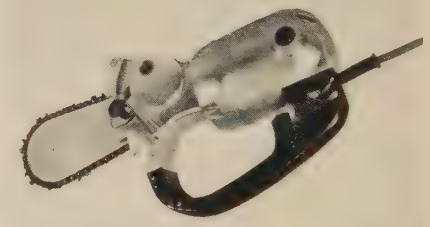

Tarpen Little Giant Chain Saw. — Designed for pruning trees; weighs under 9 lb. (4.1 kg.). Can be used single-handed from ladder or in tree, and cuts branches 4 in. (10 cm.) thick. Hoe-tiller attachment can be fixed with special adaptor to motor in place of saw head, converting into tiller for breaking ground and preparing seed beds.

Manufacturer: Tarpen Engineering Co. Ltd., Ixworth House, Ixworth Place, London S.W.3, England.

"Jungle Buster" Tree Crusher. — 95,000 lb (43,000 kg.) electric tree crusher designed specifically for removing unproductive forests. Working under rough conditions, such as 30 percent slopes, averages an acre of land every 21 minutes. On level cut-over areas with heavy hardwood stands, the average was an acre (0.4 ha.) every 17 minutes.

Manufacturer: R. G. LeTourneau, Inc. 2399, South MacArthur, Longview, Texas, United States.

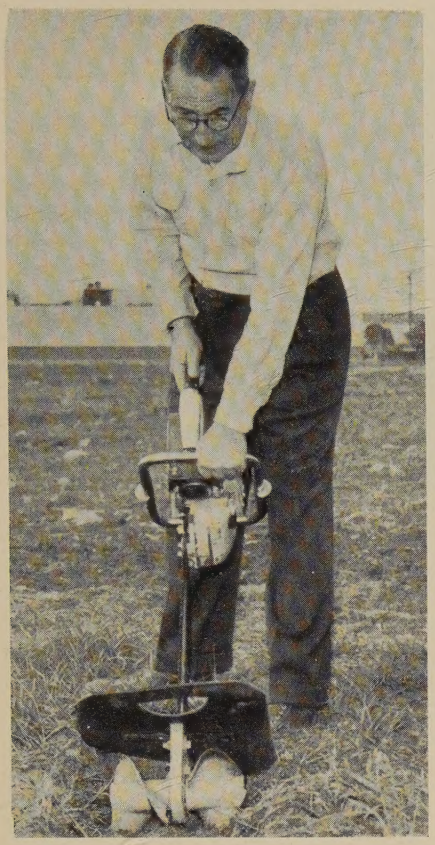

Fireline Trencher Attachment. — Consists of two spiral augers mounted on shaft at end of standard chain saw blade. Teeth of cutting chain turn augers by means of sprocket in center of shaft. Machine digs readily through sod and duff to mineral soil, throws needles and other forest litter out of trench. Also used as conventional power saw.

U.S. Department of Agriculture, Forest Service, Washington D.C., United States.

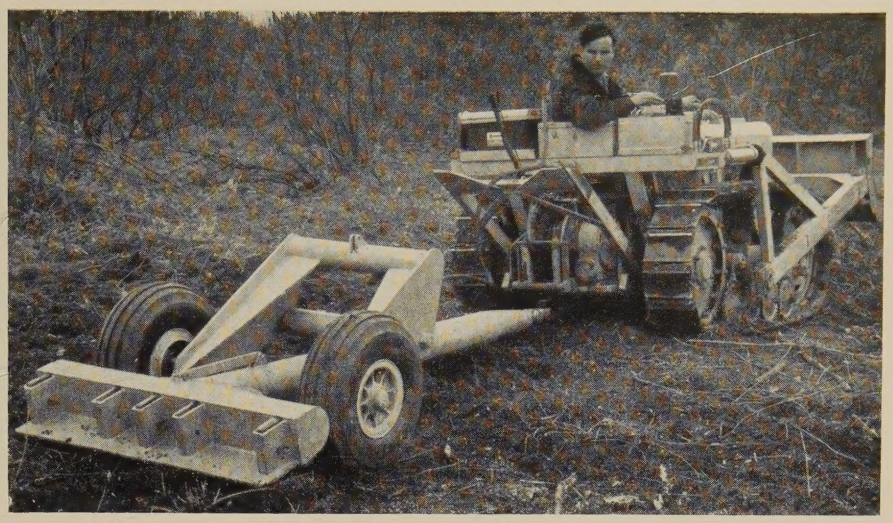

Conder Hydraulic Rippers. — Designed to operate behind tractors fitted with hydraulic equipment. Valves and couplings incorporated in pipework. Two models are manufactured: The ½ ton, for tractors of approx. 20-25 hp, with tine penetration of 18 in. (46 cm.) max.; over-all length 9 ft. 2 in. (2.79 m.); over-all width 4 ft. 2 in. (1.27 m.); height 4 ft. 1 in. (1.24 m.); weight 9 cwt. (457 kg.) without water ballast, 11 cwt. (559 kg.) with water ballast.

The ¾ ton, for tractors of approx. 35-40 hp with tine penetration of 22 in. (56 cm.) max.; over-all length 10 ft. 2 in. (3.10 m.); over-all width 6 ft. 6 in. (1.98 m.); height 4 ft. 1 in. (1.24 m.) 12 cwt. (610 kg.) without water ballast; 15 cwt. (7.62 kg.) with water ballast.

Manufacturer: Conder Engineering Company Ltd., Winchester, Hants, England.

Johanson-Chej Debarking Machines. — Three models: 25-II stationary type with electric motor; debarking range min. length 6 ½ ft. (2 m.); min. diam. 4 in. (10 cm.); max. diam. 30 in. (76 cm.). 25-III stationary and portable type, electric or gasoline motor. Debarking range min. length 3 ft. 3 in. (1 m.); min. diam. 2 ½ in. (6.3 cm.); max. diam. 14 in. (35.5 cm.). 25-V type stationary and portable with electric or gasoline motor - max. diam. 22 in. (56 cm.).

Manufacturer: Ingenjörfirma C.H.E. Johanson A/B, Nora Stad, Sweden.

Log Splitter. — Model illustrated can handle logs 30 in. (76 cm.) diam. and 24 in. (61 cm.) long. Longer frames using the standard power unit and stroke are built for cooperage and pulpwood industries. All control is one-hand lever: controls the ram stroke in either direction at any place. Frame returns automatically after stroke. 7 hp motor weighs 480 lb. (218 kg.).

Manufacturer: The Waco Aircraft Company, Troy, Ohio (near Dayton), United States.

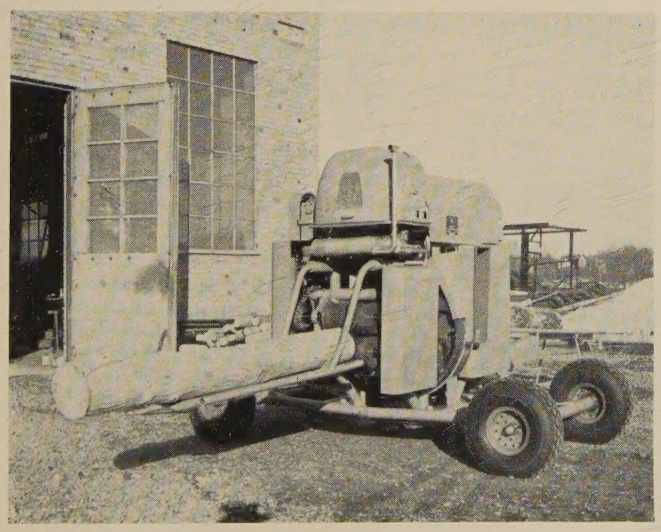

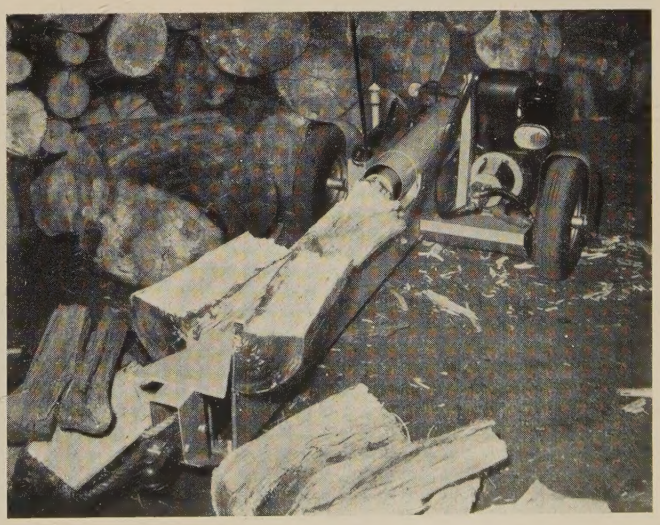

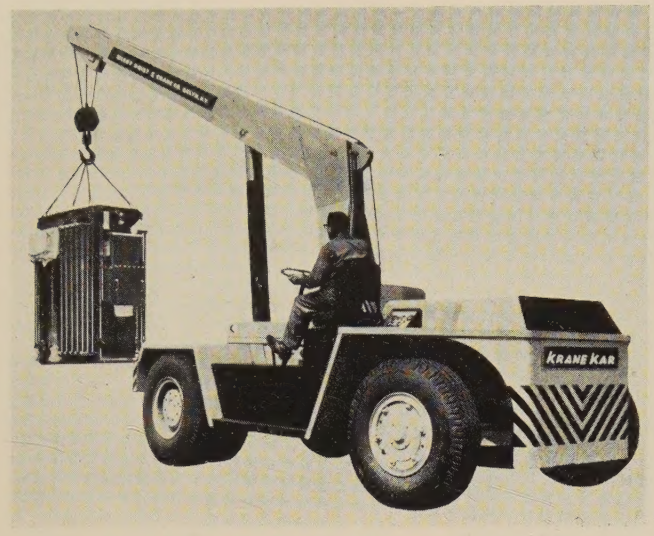

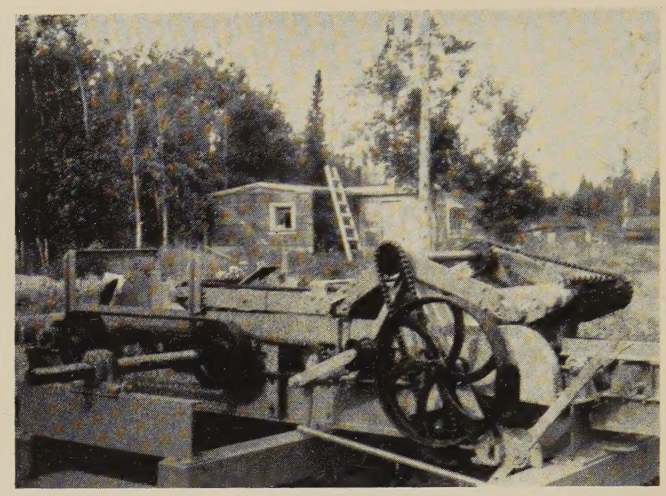

"Smith" Circular Gangsaw. — Constructed with five 32 in. (81 cm.) saws on three mandrels. Each saw equipped with guidepins and splitter. Same machine available with 7 saws for use with larger timber. Fed by six special feed rollers; will cut cants or flats from 4 to 12 in. (10 to 30 cm.). Normal operating speed is 600 to 1,000 rpm, giving feed of from 33 to 57 ft. (10 to 17.4 m.) per min. Machine free of vibration, requires no additional foundation.

Manufacturer: Smith and Schneider Sawmill Equipment Ltd., Chinook Valley, Alberta, Canada.

Lodematic. — Used for high speed lorry loading and off-loading and for interlevel lifting up to max. 14 ft. (4.27 m.). Load can be stopped automatically at exact level. Reversal of control at once returns platform to ground. As platform lowers, frame automatically telescopes, forming compact machine. 30 in. (76 cm.) wide, easily maneuvers through narrow doors and gangways. The standard hydraulic system powered by "plug-in" mains-electric motor, battery and petrol powered units also offered.

Manufacturer: Lodematic Limited, Clitheroe, Lancs., England.

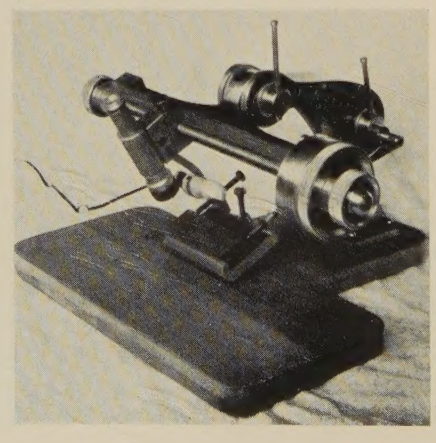

All-hydraulic 360° Continuous Revolving Crane. — Available in two sizes: Model Fax - 12,000 lb. (5,443 kg.). Cap. at 6 ft. 6 in. (1.98 m.) radius, and Model Fay - 20,000 lb. (9,072 kg.). Cap. at 6 ½ ft. (1.98 m.) radius. Standard boom 14 to 21 ft. (4.3 to 6.4 m.) manual telescoping. Available boom lengths to 40 ft. (12.2 m.). *Model Fax*: Over-all width 94 ½ in. (2.40 m.); height, boom horizontal 10 ft. (3.05 m.); length, less boom 15 ft. 1 in. (4.60 m.); turning radius 16 ft. 7 in. (5.05 m.); ground clearance 10 in. (3.05 m.). *Model Fay*: Over-all width with dual pneum. tires 101 in. (2.57 m.); with single pneum. tires 96 in. (2.44 m.).

Manufacturer: Silent Hoist and Crane Co., Brooklyn 20, New York.

De Rouen Dendro-Chronograph. — Developed for tree ring measurement, works on principle that object being studied is stationary, while microscope moves. Frame adjustable in any horizontal position. Total over-all length of microscope carriage 25 ¼ in. (64 cm.). Vernier scale on carriage marked off in 440 continuous divisions with each cm. line numbered, aids in cross checking the running length of measurements recorded from the mm. wheel. Surface divided into 100 lined units with every tenth unit numbered. Easily readable measurements to 1/100 mm. The wheel has an automatic stop for a quick return to zero. Measurements of 1 mm. signaled by sounding device on wheel.

Manufacturer: DeRouen Machine Works, 227 Oak Street, Trinidad, Colorado, United States.

A SELECTION OF RECENT FAO PUBLICATIONS

The State of Food and Agriculture 1959

World agricultural production, excluding Mainland China, was more than 4 percent higher in 1958/59 than in each of the two preceding seasons. But, though the check to agricultural expansion in 1957/58 is now fully overcome, recovery has taken place chiefly in the developed countries, often swelling stockpiles of unsaleable commodities. Also, a slowing down int he growth of *per caput* production continues.

In most of the less developed countries, the average annual growth of agricultural production remains nearly one percent greater than the growth of population; but in several countries of South East Asia and in parts of Latin America and Africa, agricultural production barely keeps pace with, or falls behind, the growth of population.

This volume contains two special chapters. One examines the living conditions among cultivators at different levels of economic development. The second chapter concerns various ways of bringing technical knowledge to the service of the farmer.

The need for a full integration between agriculture and economic development forms the central theme of this survey for 1959.

197 pages, U.S. $2.00 or 10s.

Hybrid Maize Breeding and Seed Production

(*Agricultural Development Paper No. 62*)

Today maize is one of the world's most important food products for human beings and for livestock. Maize also yields more industrial products than any other grain. In the United States alone, hybrid acreage increased from 143,000 acres in 1933 to nearly 72 million acres in 1956. Meanwhile, hybrid maize is rapidly replacing open-pollinated maize in the European and Mediterranean countries. More than 23 percent of Italy's large maize acreage is now hybrid.

The author of this Paper, Dr. Robert W. Jugenheimer, Professor of Plant Genetics in the College of Agriculture of the University of Illinois, is in charge of maize breeding in its Department of Agronomy.

432 pages, U.S. $4.00 or 20s.

Agricultural Credit in Economically Underdeveloped Countries

(*Agricultural Study No. 46*)

In this Study, the principles of agricultural credit are expounded by Dr. Horace Belshaw, a former Director of FAO's Rural Welfare Division and now Macarthy Professor of Economics at the Victoria University of Wellington, New Zealand.

He shows that, in an underdeveloped country, the Government bears a direct responsibility for encouraging, or creating, the right types of credit societies. He also shows that the methods of an agricultural credit society must often differ from those of a commercial bank.

In most underdeveloped countries, agricultural credit is static. Static credit — and this represents the heart of Dr. Belshaw's thesis — should be converted into dynamic credit. Then, at the end of the credit period, there is an improvement in output and in income or in assets.

255 pages, U.S. $3.00 or 15s.

Plant Exploration, Collection and Introduction

(*Agricultural Study No. 41*)

Requirements of an ever-increasing world population, both human and animal, have created a pressing need for introductions of new plant material that offer possibilities of crop and grassland improvement. As a result, certain countries are already occupied with the problem and many more have expressed an interest in dealing with it on a national or international basis.

This study, in reviewing briefly the botanical history of some representative economic plants, presents current views on a co-ordinated scientific approach to the exploration, collection and introduction of new plant material and suggests how international organizations might provide that co-ordination and technical guidance.

The study also indicates a need to consider how plant collections should be made and how extensive they should be in order to obtain a representative sample of the species or population being collected. Better scientific planning and conduct of exploration is advocated in place of the system of random collections of hundreds of thousands of samples.

117 pages, U.S. $1.00 or 5s.

Methods of Farm Management Investigations for Improving Farm Productivity

(*Agricultural Development Paper No. 64*)

The farm, as an economic and social institution, is centuries old. The science of farm management, on the other hand, is relatively new.

The surveyor or official, if he is to make any real headway, must first win the farmer's trust. Not the least important part of Dr. W. Y. Yang's new Agricultural Development Paper explains some of the methods of personal approach which the authorized collector of information should use. There is, for instance, the technique of putting the right questions to the farmer at the right time and in the right way.

No farm is so small that it cannot profit from better methods of management, and Dr. Yang shows convincingly that proper farm management — however restricted its scale may be — must lead to greater productivity.

228 pages, U.S. $2.00 or 10s.

SALES AGENTS FOR FAO PUBLICATIONS

Argentina	Editorial Sudamericana, S. A., Alsina 500, Buenos Aires.
Australia	H. A. Goddard Pty. Ltd., 50 Miller Street, N. Sydney.
Austria	Wilhelm Frick Buchhandlung, Graben 27, Vienna 1.
Belgium	Agence et Messageries de la Presse, 14-22 rue du Persil, Brussels.
Bolivia	Librería y Editorial "Juventud," Plaza Murillo 519, La Paz.
Brazil	Livraria Agir, Rua Mexico 98-B, Rio de Janeiro.
Burma	(*Wholesale*) Orient Longmans Private Ltd., 17 Chittaranjan Avenue, Calcutta 13, India.
Canada	The Ryerson Press, 299 Queen Street West, Toronto 2, Ontario; *Periodicals only*: Periodica, 5090 Av. Papineau, Montreal 34.
Ceylon	M. D. Gunasena and Co. Ltd., 217 Norris Road, Colombo 11.
Chile	Sala y Grijalbo Ltda., Bandera 140-F, Casilla 180D, Santiago.
Colombia	"Agricultural Tropical," Carrera 13, No. 13-17, Bogotá; Librería Central, Calle 14, N. 6-88, Bogotá.
Costa Rica	Imprenta y Librería Trejos, S.A., Apartado 1313, San José.
Cuba	René de Smedt, La Casa Belga, O'Reilly 455, Havana.
Denmark	Ejnar Munksgaard, Norregade 6, Copenhagen K.
Ecuador	"La Hacienda," Escobedo No. 1003 y P. Icaza, Casilla No. 3983, Guayaquil; Librería Muñoz Hnos. y Cía., Apartado 522, Quito.
Egypt	Librairie de la Renaissance d'Egypte, 9 Sh. Adly Pasha, Cairo.
El Salvador	Manuel Navas y Cía., 1ª Avenida Sur 35, San Salvador.
Ethiopia	International Press Agency, P. O. Box No. 120, Addis Ababa.
Federation of Malaya	Caxton Stationers Ltd., 13 Market Street, Kuala Lumpur.
Finland	Akateeminen Kirjakauppa, 2 Keskuskatu, Helsinki.
France	Les Editions A. Pedone, 13 rue Soufflot, Paris 5e.
Germany	Paul Parey, Lindenstrasse 44-47, Berlin SW 68.
Greece	"Eleftheroudakis," Constitution Square, Athens.
Guatemala	Sociedad Económico Financiera, Edificio Briz, Despacho 207, 6ª Av. 14-33, Zona I, Guatemala.
Haiti	Max Bouchereau, Librairie "A la Caravelle," B. P. 111B, Port-au-Prince.
Hong Kong	Swindon Book Co., 25 Nathan Road, Kowloon.
Iceland	Halldor Jonsson, Mjostraeti 2, Reykjavik; Jonsson & Juliusson, Garöastraeti 2, Reykjavik.
India	(*Wholesale*) Orient Longmans Private Ltd., 17 Chittaranjan Avenue, Calcutta 13; Nicol Road, Ballard Estate, Bombay 1; 36-A Mount Road, Madras 2; Kanson House, 24/1 Asaf Ali Road, Post Box 386, New Delhi; Gunfoundry Road, Hyderabad 1; (*Retail*) Oxford Book and Stationery Co., Scindia House, New Delhi; 17 Park Street, Calcutta.
Indonesia	Pembangunan Ltd., 84 Gunung Sahari, Djakarta.
Iraq	Mackenzie's Bookshop, Baghdad.
Ireland	The Controller, Stationery Office, Dublin.
Israel	Blumstein's Bookstores Ltd., P. O. Box 4101, Tel Aviv.
Italy	Libreria Internazionale U. Hoepli, Galleria Piazza Colonna, Rome; A.E.I.O.U., Via Meravigli 16, Milan.
Japan	Maruzen Company Ltd., 6 Tori-Nichome, Nihonbashi, Tokyo.
Lebanon	Librairie Universelle, Av. des Français, Beirut.
Mexico	Manuel Gómez Pezuela e Hijo, Donceles 12, Mexico, D. F.
Morocco	Centre de Diffusion Documentaire du B.E.P.I., 8 rue Michaux-Bellaire, Rabat.
Netherlands	N. V. Martinus Nijhoff, Lange Voorhout 9, The Hague.
New Zealand	Whitcombe and Tombs Ltd., Auckland, Wellington, Hamilton, Christchurch, Dunedin, Invercargill, Timaru.
Norway	Johan Grundt Tanum Forlag, Kr. Augustsgt. 7ª Oslo.
Pakistan	*East*: Orient Longmans Private Ltd., 17 Nazimuddin Road, Dacca. *West*: Mirza Book Agency, 9-A Shah Alam Market, Lahore.
Panama	Agencia Internacional de Publicaciones, J. Menéndez, Plaza de Arango No. 3, Panama.
Paraguay	Agencia de Librerías de Salvador Nizza, Calle Pte. Franco No. 39-43, Asunción.
Peru	Librería Internacional del Peru, S. A., Casilla 1417, Lima.
Philippines	The Modern Book Company, 518-520 Rizal Avenue, Manila.
Poland	Ars Polona, Krakowskie Przedmiescie, 7, Warsaw.
Portugal	Livraria Bertrand, S.A R L., Rua Garrett 73-75, Lisbon.
Spain	José Bosch Librero, Ronda Universidad 11, Barcelona; Librería Mundi-Prensa, Castelló 37, Madrid; Librería General Indipendencia, 8, Saragossa.
Sweden	C. E. Fritze, Fredsgatan 2, Stockholm 16; Gumperts A. B., Göteborg; Henrik Lindstahls Bokhandel, Odengatan 22, Stockholm.
Switzerland	Librairie Payot, S. A., Lausanne and Geneva; Hans Raunhardt, Kirchgasse 17, Zurich 1.
Syria	Librairie Universelle, Av. Fouad 1er, B. P. 336, Damascus.
Taiwan	The World Book Company Ltd., 99 Chungking South Road, Section 1, Taipeh.
Thailand	Requests for FAO publications should be addressed to: FAO Regional Office for Asia and the Far East, Maliwan Mansion, Bangkok.
Tunisia	Victor Boukhors, 4 rue Nocard, Tunis.
Turkey	Librairie Hachette, 469 Istiklal Caddesi, Beyoglu, Istanbul.
Union of South Africa	Van Schaik's Book Store, Pty., Ltd., P. O. Box 724, Pretoria.
United Kingdom	H. M. Stationery Office P. O. Box 569, London S. E. 1.
United States	Columbia University Press, International Documents Service, 2960 Broadway, New York 27, N.Y.
Uruguay	Hector d'Elia, Oficina de Representación de Editoriales, Plaza Cagancha 1342, Montevideo.
Venezuela	Suma, S. A., Sabana Grande 102, "El Recreo," Caracas.
Yugoslavia	Drzavno Preduzece, Jugoslovenska Knjiga, Terazije 27/11, Belgrade; Cankarjeva Zalozba, P. O. Box 41, Ljubljiana.
Other countries	Requests from countries where sales agents have not yet been appointed may be sent to: Distribution and Sales Section, Food and Agriculture Organization of the United Nations. Viale delle Terme di Caracalla, Rome, Italy.

FAO publications are priced in U.S. dollars and pounds sterling. Payment to FAO sales agents may be made in local currencies.

TIPOGRAFICA CASTALDI - ROMA - 1960